COURSE MATERIAL

III Year B. Tech II- Semester

MECHANICAL ENGINEERING

AY: 2023-24

DESIGN OF TRANSMISSION SYSTEM

R20A0322

Prepared by:
Dr. T. Lokeswara Rao
Associate Professor

MALLA REDDY COLLEGE OF ENGINEERING & TECHNOLOGY

DEPARTMENT OF MECHANICAL ENGINEERING

(Autonomous Institution-UGC, Govt. of India)
Secunderabad-500100,Telangana State, India.
www.mrcet.ac.in

MALLA REDDY COLLEGE OF ENGINEERING & TECHNOLOGY

(Autonomous Institution – UGC, Govt. of India)

DEPARTMENT OF MECHANICAL ENGINEERING

CONTENTS

MALLA REDDY COLLEGE OF ENGINEERING & TECHNOLOGY

(Autonomous Institution – UGC, Govt. of India)

VISION

- To establish a pedestal for the integral innovation, team spirit, originality and competence in the students, expose them to face the global challenges and become technology leaders of Indian vision of modern society.

MISSION

- To become a model institution in the fields of Engineering, Technology and Management.
- To impart holistic education to the students to render them as industry ready engineers.
- To ensure synchronization of MRCET ideologies with challenging demands of International Pioneering Organizations.

QUALITY POLICY

- To implement best practices in Teaching and Learning process for both UG and PG courses meticulously.
- To provide state of art infrastructure and expertise to impart quality education.
- To groom the students to become intellectually creative and professionally competitive.
- To channelize the activities and tune them in heights of commitment and sincerity, the requisites to claim the never - ending ladder of **SUCCESS** year after year.

For more information: www.mrcet.ac.in

VISION

To become an innovative knowledge center in mechanical engineering through state-of-the-art teaching-learning and research practices, promoting creative thinking professionals.

MISSION

The Department of Mechanical Engineering is dedicated for transforming the students into highly competent Mechanical engineers to meet the needs of the industry, in a changing and challenging technical environment, by strongly focusing in the fundamentals of engineering sciences for achieving excellent results in their professional pursuits.

Quality Policy

- ✓ To pursuit global Standards of excellence in all our endeavors namely teaching, research and continuing education and to remain accountable in our core and support functions, through processes of self-evaluation and continuous improvement.
- ✓ To create a midst of excellence for imparting state of art education, industry-oriented training research in the field of technical education.

MALLA REDDY COLLEGE OF ENGINEERING & TECHNOLOGY

(Autonomous Institution – UGC, Govt. of India)

www.mrcet.ac.in

Department of Mechanical Engineering

PROGRAM OUTCOMES

Engineering Graduates will be able to:

1. **Engineering knowledge:** Apply the knowledge of mathematics, science, engineering fundamentals, and an engineering specialization to the solution of complex engineering problems.
2. **Problem analysis**: Identify, formulate, review research literature, and analyze complex engineering problems reaching substantiated conclusions using first principles of mathematics, natural sciences, and engineering sciences.
3. **Design/development of solutions**: Design solutions for complex engineering problems and design system components or processes that meet the specified needs with appropriate consideration for the public health and safety, and the cultural, societal, and environmental considerations.
4. **Conduct investigations of complex problems**: Use research-based knowledge and research methods including design of experiments, analysis and interpretation of data, and synthesis of the information to provide valid conclusions.
5. **Modern tool usage**: Create, select, and apply appropriate techniques, resources, and modern engineering and IT tools including prediction and modeling to complex engineering activities with an understanding of the limitations.
6. **The engineer and society**: Apply reasoning informed by the contextual knowledge to assess societal, health, safety, legal and cultural issues and the consequent responsibilities relevant to the professional engineering practice.
7. **Environment and sustainability**: Understand the impact of the professional engineering solutions in societal and environmental contexts, and demonstrate the knowledge of, and need for sustainable development.
8. **Ethics**: Apply ethical principles and commit to professional ethics and responsibilities and norms of the engineering practice.
9. **Individual and teamwork**: Function effectively as an individual, and as a member or leader in diverse teams, and in multidisciplinary settings.
10. **Communication**: Communicate effectively on complex engineering activities with the engineering community and with society at large, such as, being able to comprehend and write effective reports and design documentation, make effective presentations, and give and receive clear instructions.
11. **Project management and finance**: Demonstrate knowledge and understanding of the engineering and management principles and apply these to one's own work, as a member and leader in a team, to manage projects and in multidisciplinary environments.

12. **Life-long learning**: Recognize the need for and have the preparation and ability to engage in independent and life-long learning in the broadest context of technological change.

PROGRAM SPECIFIC OUTCOMES (PSOs)

PSO1 Ability to analyze, design and develop Mechanical systems to solve the Engineering problems by integrating thermal, design and manufacturing Domains.

PSO2 Ability to succeed in competitive examinations or to pursue higher studies or research.

PSO3 Ability to apply the learned Mechanical Engineering knowledge for the Development of society and self.

Program Educational Objectives (PEOs)

The Program Educational Objectives of the program offered by the department are broadly listed below:

PEO1: PREPARATION

To provide sound foundation in mathematical, scientific and engineering fundamentals necessary to analyze, formulate and solve engineering problems.

PEO2: CORE COMPETANCE

To provide thorough knowledge in Mechanical Engineering subjects including theoretical knowledge and practical training for preparing physical models pertaining to Thermodynamics, Hydraulics, Heat and Mass Transfer, Dynamics of Machinery, Jet Propulsion, Automobile Engineering, Element Analysis, Production Technology, Mechatronics etc.

PEO3: INVENTION, INNOVATION AND CREATIVITY

To make the students to design, experiment, analyze, interpret in the core field with the help of other inter disciplinary concepts wherever applicable.

PEO4: CAREER DEVELOPMENT

To inculcate the habit of lifelong learning for career development through successful completion of advanced degrees, professional development courses, industrial training etc.

PEO5: PROFESSIONALISM

To impart technical knowledge, ethical values for professional development of the student to solve complex problems and to work in multi-disciplinary ambience, whose solutions lead to significant societal benefits.

Blooms Taxonomy

Bloom's Taxonomy is a classification of the different objectives and skills that educators set for their students (learning objectives). The terminology has been updated to include the following six levels of learning. These 6 levels can be used to structure the learning objectives, lessons, and assessments of a course.

1. **Remembering**: Retrieving, recognizing, and recalling relevant knowledge from long- term memory.
2. **Understanding**: Constructing meaning from oral, written, and graphic messages through interpreting, exemplifying, classifying, summarizing, inferring, comparing, and explaining.
3. **Applying**: Carrying out or using a procedure for executing or implementing.
4. **Analyzing**: Breaking material into constituent parts, determining how the parts relate to one another and to an overall structure or purpose through differentiating, organizing, and attributing.
5. **Evaluating**: Making judgments based on criteria and standard through checking and critiquing.
6. **Creating**: Putting elements together to form a coherent or functional whole; reorganizing elements into a new pattern or structure through generating, planning, or producing.

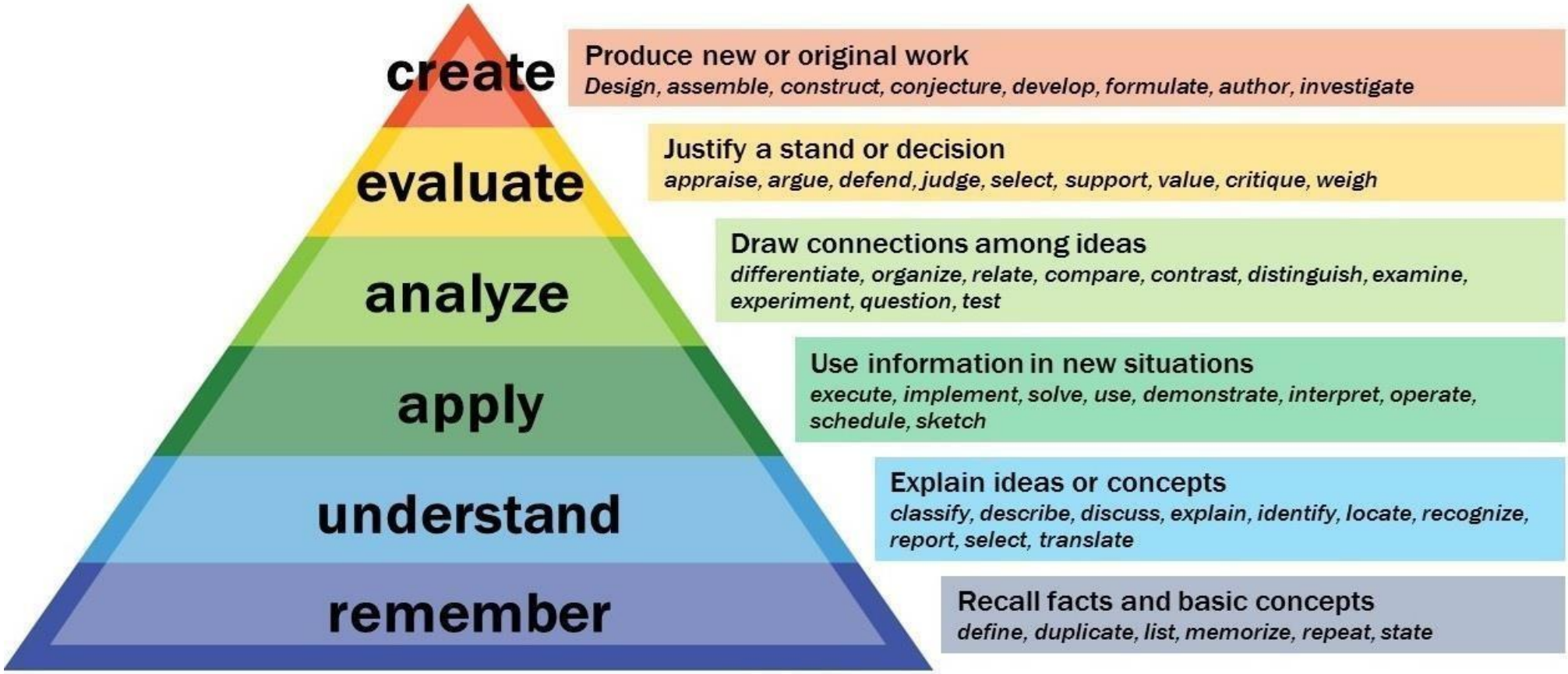
create
Produce new or original work
Design, assemble, construct, conjecture, develop, formulate, author, investigate
evaluate
Justify a stand or decision
appraise, argue, defend, judge, select, support, value, critique, weigh
analyze
Draw connections among ideas
differentiate, organize, relate, compare, contrast, distinguish, examine, experiment, question, test
apply
Use information in new situations
execute, implement, solve, use, demonstrate, interpret, operate, schedule, sketch
understand
Explain ideas or concepts
classify, describe, discuss, explain, identify, locate, recognize, report, select, translate
remember
Recall facts and basic concepts
define, duplicate, list, memorize, repeat, state

MALLA REDDY COLLEGE OF ENGINEERING & TECHNOLOGY

III Year B. Tech, ME-II Sem

L	T/P/D	C
3		3

(R20A0322) DESIGN OF TRANSMISSION SYSTEM

NOTE: Design Data Book is permitted. Design of all components should include design for strength and rigidity apart from engineering performance requirements.

Course objectives:

- To design the engine parts like piston, connecting rod and analyze design procedure different loading conditions
- To introduce the concept, procedures, and data to analyze machine elements in power transmission systems.
- To apply principles of design and Analyze the forces in mechanical power transmission elements such gears
- Implement basic principles for the design of power screws And the forces, couples, torques etc,

UNIT–I

DESIGN OF FLEXIBLE ELEMENTS: Transmission of power by Belt and Ropedrives, Transmission efficiencies, Belts – Flat and V types.

.

UNIT–II

DESIGN OF I.C ENGINE PARTS: Connecting Rod: Thrust in connecting rod – stress due to whipping action on connecting rod ends – Pistons, Forces acting on piston – Construction, Design and proportions ofpiston.

UNIT–III

MECHANICAL ENERGY STORING ELEMENTS: Stresses and deflections of helical springs – Extension and compression springs – Design of springs for fatigue loading – natural frequency of helical springs – Energy storage capacity – helical torsion springs.

UNIT–IV

SPUR & HELICAL GEARS: Spur gears & Helical gears- important Design parameters – Design of gears using AGMAprocedure involving Lewis and Buckingham equations. Check for wear.

UNIT–V

DESIGN OF POWER SCREWS: Design of screw, Square ACME , Buttress screws, compound screw, differential screw.

TEXT BOOKS:

1. Machine Design by R.S.Khurmi and J.K.Gupta, S.Chand Publishers,New Delhi.
2. Machine Design, S MD Jalaludin, Anuradha Publishers.
3. Design of Machine Elements by V. Bhandari TMH

REFERENCE BOOKS:

1. Machine Design Data Book by S MD Jalaludin, Anuradha Publishers
2. Machine Design Data Book by P.S.G. College of Technology
3. Machine Design by Pandya and Shah, Chortar Publications.
4. Machine Design / R.N. Norton
5. Mechanical Engineering Design / JE Shigley.

Course Out comes:

Student will be able to:

- To understand the types belt drives and Select suitable belt drives and associated elements from manufacturers catalogues under given loading conditions to design the springs for different loading conditions
- Calculate the design parameter for energy storage element and engine components, connecting rod and piston
- Select appropriate gears for power transmission on the basis of given load and speed Design gears based on the given conditions Apply the design concepts to estimate the strength of the gear
- Analyze power screws subjected to loading

UNIT 1

DESIGN OF FLEXIBLE DRIVES

Course objectives:

1. To introduce the concept, procedures, and data to analyze machine elements in power transmission systems.

Course Outcomes:

1. To understand the types belt drives and Select suitable belt drives and associated elements from manufacturers catalogues under given loading conditions to design the springs for different loading conditions

Introduction

The belts or ropes are used to transmit power from one shaft to another by means of pulleys which rotate at the same speed or at different speeds.

The amount of power transmitted depends upon the following factors:

1. The velocity of the belt.

2. The tension under which the belt is placed on the pulleys.

3. The arc of contact between the belt and the smaller pulley.

4. The conditions under which the belt is used. It may be noted that

(a) The shafts should be properly in line to insure uniform tension across the belt section.

(b) The pulleys should not be too close together, in order that the arc of contact on the smaller pulley may be as large as possible.

(c) The pulleys should not be so far apart as to cause the belt to weigh heavily on the shafts, thus increasing the friction load on the bearings.

(d) A long belt tends to swing from side to side, causing the belt to run out of the pulleys, which in turn develops crooked spots in the belt.

(e) The tight side of the belt should be at the bottom, so that whatever sag is present on the loose side will increase the arc of contact at the pulleys.

(f) In order to obtain good results with flat belts, the maximum distance between the shafts should not exceed 10 meters and the minimum should not be less than 3.5 times the diameter of the larger pulley. Selection of a Belt Drive

Various important factors upon which the selection of a belt drive depends:

1. Speed of the driving and driven shafts,

2. Speed reduction ratio,

3. Power to be transmitted,

4. Centre distance between the shafts,

5. Positive drive requirements,

6. Shafts layout,

7. Space available, and 8. Service conditions.

Types of Belt Drives

The belt drives are usually classified into the following three groups:

1. Light drives. These are used to transmit small powers at belt speeds up to about 10 m/s as in agricultural machines and small machine tools.

2. Medium drives. These are used to transmit medium powers at belt speeds over 10 m/s but up to 22 m/s, as in machine tools.

3. Heavy drives. These are used to transmit large powers at belt speeds above 22 m/s as in Compressors and generators.

Types of Belts

Though there are many types of belts used these days, yet the following are important from the

1. Flat belt.

The flat belt as shown in Fig. 18.1 (a), is mostly used in the factories and workshops, where a moderate amount of power is to be transmitted, from one pulley to another when the two pulleys are not more than 8 metres apart.

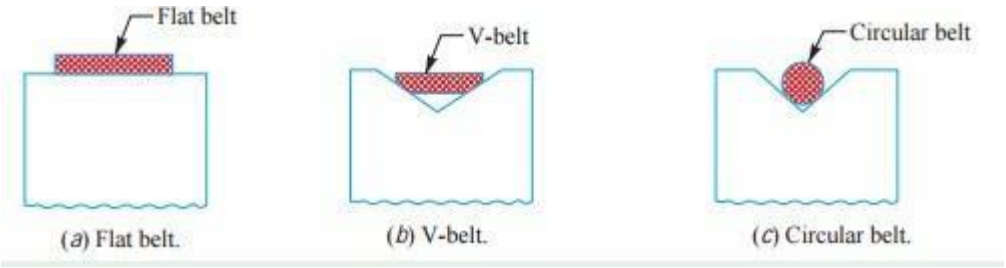

2. V- belt. The V-belt as shown in Fig. (b) is mostly used in the factories and workshops, where a great amount of power is to be transmitted, from one pulley to another, when the two pulleys are very near to each other.

3. Circular belt or rope. The circular belt or rope as shown in Fig. (c) Is mostly used in the factories and workshops, where a great amount of power is to be transmitted, from one pulley to another, when the two pulleys are more than 8 meters apart. If a huge amount of power is to be transmitted, then a single belt may not be sufficient. In such a case, wide pulleys (for V-belts or circular belts) with a number of grooves are used. Then a belt in each groove is provided to transmit the required amount of power from one pulley to another.

MATERIAL USED FORBELTS

The material used for belts and ropes must be strong, flexible, and durable. It must have a high coefficient of friction. The belts, according to the material used, are classified as follows

LEATHER BELTS.

The most important material for the belt is leather. The best leather belts are made from 1.2 metres to 1.5 metres long strips cut from either side of the back bone of the top grade steer hides. The hair side of the leather is smoother and harder than the flesh side, but the flesh side is stronger. The fibres on the hair side are perpendicular to the surface, while those on the flesh side are interwoven and parallel to the surface. Therefore for these reasons, the hair side of a belt should be in contact with the pulley surface, as shown in Fig. This gives a more intimate contact between the belt and the pulley and places the greatest tensile strength of the belt section on the outside, where the tension is maximum as the belt passes over the pulley.

(a) Single layer belt. (b) Double layer belt

2. The leather may be either oak-tanned or mineral salt tanned e.g. chrome tanned. In order to increase the thickness of belt, the strips are cemented together. The belts are specified according to the number of layers e.g. single, double or triple ply and according to the thickness of hides used e.g. light, medium or heavy.

The leather belts must be periodically cleaned and dressed or treated with a compound or dressing containing neat foot or other suitable oils so that the belt will remain soft and flexible.

3. **COTTON OR FABRIC BELTS**: Most of the fabric belts are made by folding canvass or cotton duck to three or more layers (depending upon the thickness desired) and stitching together. These belts are woven also into a strip of the desired width and thickness. They are impregnated with some filler like linseed oil in order to make the belts water proof and to prevent injury to the fibres. The cotton belts are cheaper and suitable in warm climates, in damp atmospheres and in exposed positions. Since the cotton belts require little attention, therefore these belts are mostly used in farm machinery, belt conveyor etc.
4. **RUBBER BELT.** The rubber belts are made of layers of fabric impregnated with rubber com- position and have a thin layer of rubber on the faces. These belts are very flexible but are quickly destroyed if allowed to come into contact with heat, oil or grease. One of the principal advantages of these belts is that they may be easily made endless. These belts are found suitable for saw mills, paper mills where they are exposed to moisture.
5. **BALATA BELTS.** These belts are similar to rubber belts except that balata gum is used in place of rubber. These belts are acid proof and water proof and it is not effected animal oils or alkalies. The balata belts should not be at temperatures above 40° C because at this temperature the balata begins to soften and becomes sticky. The strength of balata belts is 25 per cent higher than rubber belts.

TYPES OF FLAT BELT DRIVES

The power from one pulley to another may be transmitted by any of the following types of belt drives:

OPEN BELT DRIVE. The open belt drive, as shown in Fig. 3.3, is used with shafts arranged parallel and rotating in the same direction. In this case, the driver A pulls the belt from one side (i.e. lower

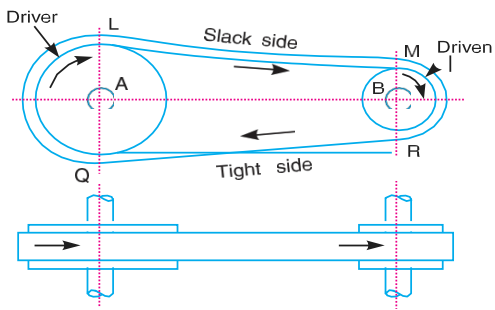

side RQ) and delivers it to the other side (i.e. upper side L M). Thus the tension in the lower side belt will be more than that in the upper side belt. The lower side belt (because of more tension) is known as tight side whereas the upper side belt (because of less tension) is known as slack side, as shown in Fig.

CROSSED OR TWIST BELT DRIVE : The crossed or twist belt drive, as shown in Fig. is used with shafts arranged parallel and rotating in the opposite directions.

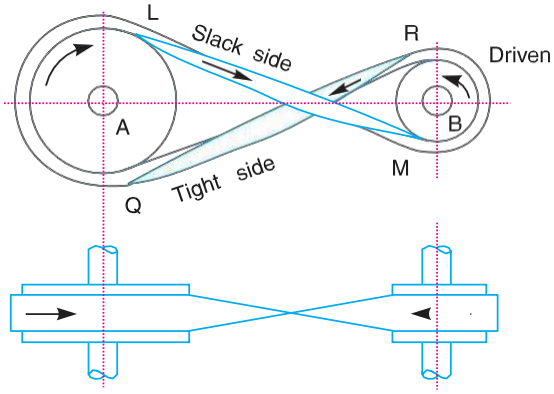

Fig. Crossed or twist belt drive.

In this case, the driver pulls the belt from one side (i.e. RQ) and delivers it to the other side (i.e. L M). Thus the tension in the belt RQ will be more than that in the belt L M. The belt RQ (because of more tension) is known as tight side, whereas the belt LM (because of less tension) is known as slack side, as shown in Fig. A little consideration will show that at a point where the belt crosses, it rubs against each other and there will be excessive wear and tear. In order to avoid this, the shafts should be placed at a maximum distance of 20 b, where b is the width of belt and the speed of the belt should be less than 15m/s.

QUARTER TURN BELT DRIVE. The quarter turn belt drives also known as right angle belt drive, as shown in Fig. (a), is used with shafts arranged at right angles and rotating in one definite direction. In order to prevent the belt from leaving the pulley, the width of the face of the pulley should be greater or equal to b, where b is the width of belt.

In case the pulleys cannot be arranged, as shown in Fig.(a), or when the reversible motion is desired, then a quarter turn belt drive with guide pulley, as shown in Fig.(b), may be used.

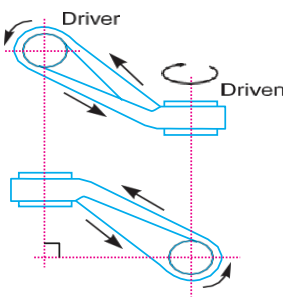

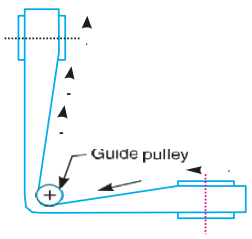

(a) Quarter turns belt drive. (b) Quarter turn belt drive with guide pulley

4. BELT DRIVE WITH IDLER PULLEYS.

A belt drive with an idler pulley (also known as jockey pulley drive) as shown in Fig. 18.7, is used with shafts arranged parallel and when an open belt drive can't be used due to small angle of contact on the smaller pulley. This type of drive is provided to obtain high velocity ratio and when the required belt tension can't be obtained by other means. When it is desired to transmit motion from one shaft to several shafts, all arranged in parallel, a belt drive with many idler pulleys, as shown in Fig.

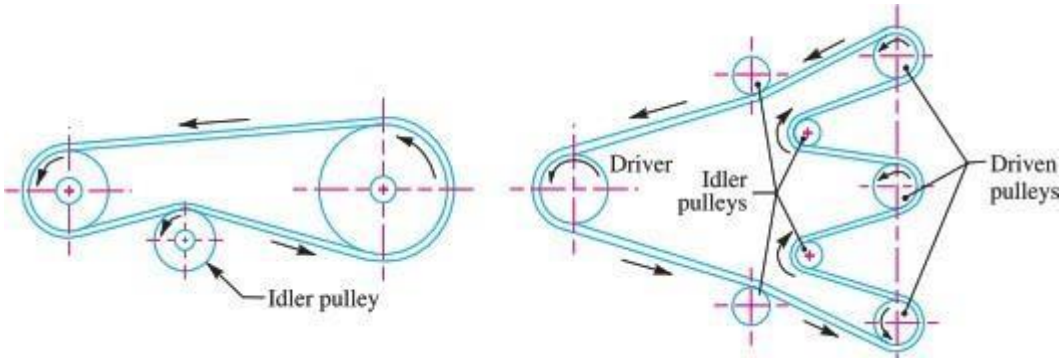

COMPOUND BELT DRIVE.

A compound belt drive, as shown in Fig. is used when power is transmitted from one shaft to another through a number of pulleys.

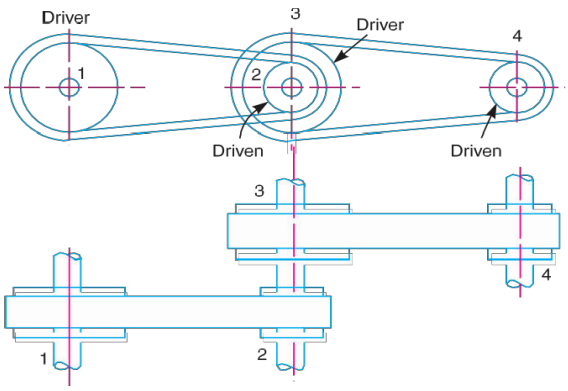

Fig: Compound belt drive.

STEPPED OR CONE PULLEY DRIVE.

A stepped or cone pulley drive, as shown in Fig. is used for changing the speed of the driven shaft while the

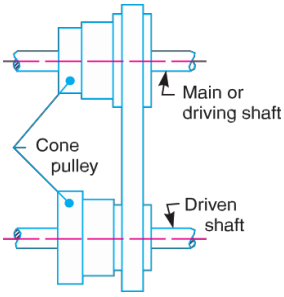

main or driving shaft runs at constant speed. This is accomplished by shifting the belt from one part of the steps to the other.

7. Fast and loose pulley drive. A fast and loose pulley drive, as shown in Fig. is used when the driven or

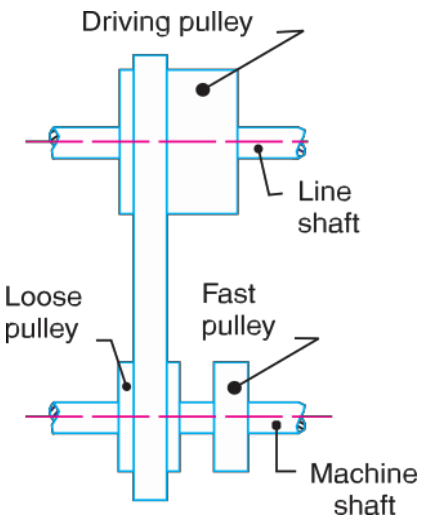

machine shaft is to be started or stopped whenever desired without interfering with the driving shaft. A pulley which is keyed to the machine shaft is called fast pulley and runs at the same speed as that of machine shaft. A loose pulley runs freely over the machine shaft and is incapable of transmitting any power. When the driven shaft is required to be stopped, the belt is pushed on to the loose pulley by means of sliding bar having belt forks.

VELOCITY RATIO OF A BELT DRIVE:

It is the ratio between the velocities of the driver and the follower or driven. It may be expressed, mathematically, as discussed below:

Let d_1 = Diameter of the driver,

d_2 = Diameter of the follower,

N_1 = Speed of the driver in r.p.m.,

N_2 = Speed of the follower in r.p.m.,

∴ Length of the belt that passes over the driver, in one minute

$$= \pi d_1 N_1$$

Similarly, length of the belt that passes over the follower, in one minute

$$= \pi d_2 N_2$$

Since the length of belt that passes over the driver in one minute is equal to the length of belt that passes over the follower in one minute, therefore

$$\because \quad \pi d_1 N_1 = \pi d_2 N_2$$

and velocity ratio, $$\frac{N_2}{N_1} = \frac{d_1}{d_2}$$

When thickness of the belt (t) is considered, then velocity ratio,

$$\frac{N_2}{N_1} = \frac{d_1 + t}{d_2 + t}$$

Notes : 1. The velocity ratio of a belt drive may also be obtained as discussed below:

We know that the peripheral velocity of the belt on the driving pulley,

$$v_1 = \frac{\pi d_1 N_1}{60} \text{ m/s}$$

and peripheral velocity of the belt on the driven pulley,

$$v_2 = \frac{\pi d_2 N_2}{60} \text{ m/s}$$

When there is no slip, then $v_1 = v_2$.

$$\therefore \quad \frac{\pi d_1 N_1}{60} = \frac{\pi d_2 N_2}{60} \text{ or } \frac{N_2}{N_1} = \frac{d_1}{d_2}$$

2. In case of a compound belt drive as shown in Fig. 18.7, the velocity ratio is given by

$$\frac{N_4}{N_1} = \frac{d_1 \times d_3}{d_2 \times d_4} \text{ or } \frac{\text{Speed of last driven}}{\text{Speed of first driver}} = \frac{\text{Product of diameters of drivers}}{\text{Product of diameters of drivens}}$$

SLIP OF THE BELT

In the previous articles we have discussed the motion of belts and pulleys assuming a firm Frictional grip between the belts and the pulleys. But sometimes, the frictional grip becomes insufficient. This may cause some forward motion of the driver without carrying the belt with it. This is called slip of the belt and is generally expressed as a percentage.

s1 % = Slip between the driver and the belt, and

s2 % = Slip between the belt and follower,

$$\frac{N_2}{N_1} = \frac{d_1 + t}{d_2 + t}\left(1 - \frac{s}{100}\right)$$

CREEP OF BELT:

When the belt passes from slack side to the tight side, certain of the belt extends and it contracts again when the belt passes from the tight side to the slack side. Due to these changes of length, there is a relative motion between the belt and the pulley surfaces. This relative motion is termed as creep. The total effect of creep is reducing slightly the speed of the driven pulley or follower. Considering creep, velocity ratio is given by

$$\frac{N_2}{N_1} = \frac{d_1}{d_2} \times \frac{E + \sqrt{\sigma_2}}{E + \sqrt{\sigma_1}}$$

Where σ_1 & σ_2 =stress in the belt on the tight and slack side

E = young's modulus for the material of the belt

Note: since the effect of creep is very small, therefore it is generally neglected.

Length of Open Belt Drive:

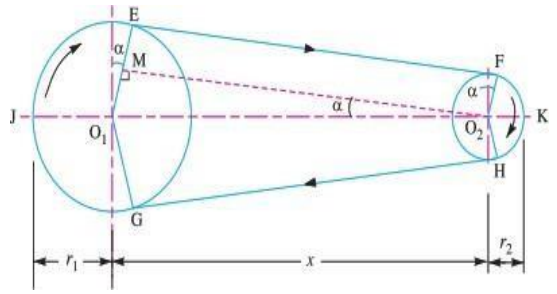

$$= \pi (r_1 + r_2) + 2x + \frac{(r_1 - r_2)^2}{x} \quad \text{... (in terms of pulley radii)}$$

$$= \frac{\pi}{2}(d_1 + d_2) + 2x + \frac{(d_1 - d_2)^2}{4x} \quad \text{... (in terms of pulley diameters)}$$

Length of a Cross Belt Drive

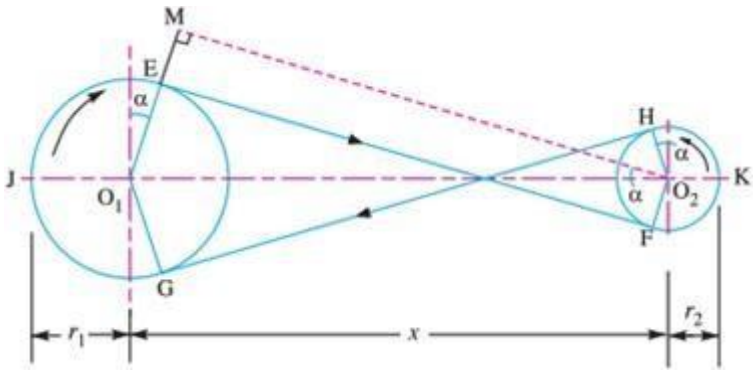

$$= \pi (r_1 + r_2) + 2x + \frac{(r_1 + r_2)^2}{x} \quad \text{... (in terms of pulley radii)}$$

$$= \frac{\pi}{2}(d_1 + d_2) + 2x + \frac{(d_1 + d_2)^2}{4x} \quad \text{... (in terms of pulley diameters)}$$

Power Transmitted by a Belt:

T1 and T2 = Tensions in the tight side and slack side of the belt respectively in Newton's,

r1 and r2 = Radii of the driving and driven pulleys respectively in meters,

v = Velocity of the belt in m/s.

$$P = (T_1 - T_2)\, V \ \frac{N-m}{sec}$$

CENTRIFUGAL TENSION:

When the belt runs at lower speed, the initial tension given to the belt will be sufficient to keep the belt on the pulley with required grip, on the other hand, if the belt speed increases, due to centrifugal action, the belt will try to fly off from the pulley. At the same time, the tensions at the tight side and slack side will increase. The force applied on the shaft due to centrifugal action is called as centrifugal tension.

Let T_1 = Tension in the tight side

T_2 = Tension in the slack side

Centrifugal tension

$$T_c = mv^2$$

Note: It is known that, the total tensions at tight side and slack side are given by

$T_{t1} = T_1 + T_c$ and $T_{t2} = T_2 + T_c$

Since the centrifugal tension depends on the belt velocity, at low speeds the centrifugal action and its tension may be neglected. But for the higher speeds, the centrifugal tension will be taken into account.

$T_{t1} = T_1$ and $T_{t2} = T_2$ at low speeds, and $T_{t1} = T_1 + T_c$ and $T_{t2} = T_2 + T_c$ high speeds.

Also since the centrifugal force tries to pull the belt away from the pulley resulting the decrease of power transmitting capacity, the linear velocity of the belt is limited to 17.5 to 22.5 m/s, in order to control the centrifugal tension. If μ is the coefficient of friction between the belt and pulley and θ is the angle of contact for driving pulley in radians, then it is found that the ratio of driving tensions is

$$2.3\log\left(\frac{T_1}{T_2}\right) = \mu\theta$$

$$\left(\frac{T_1}{T_2}\right) = e^{\mu\theta}$$

when the centrifugal tension (T_c) is neglected.

$$\frac{T_1 - T_c}{T_2 - T_c} = e^{\mu\theta}$$

When the centrifugal tension (T_c) is considered.

Maximum Tension in the Belt

σ = Maximum safe stress,

b = Width of the belt, and

t = Thickness of the belt.

T = Maximum stress × Cross-sectional area of belt **= σ.b.t**

When centrifugal tension is neglected, then

T (or Tt1) =T1, i.e. Tension in the tight side of the belt.

When centrifugal tension is considered, then

T (or Tt1) =T1 + TC

Condition for the Transmission of Maximum Power

I. We know that $T_1 = T - T_C$ and for maximum power, $T_C = \frac{T}{3}$.

$$T_1 = T - \frac{T}{3} = \frac{2T}{3}$$

From equation (*iv*), we find that the velocity of the belt for maximum power,

$$v = \sqrt{\frac{T}{3m}}$$

Initial Tension in the Belt

the belt is subjected to some tension, called initial tension

T_0= Initial tension in the belt,

T_1= Tension in the tight side of the belt,

T_2= Tension in the slack side of the belt, and

α = Coefficient of increase of the belt length per unit force.

$$T_0 = \frac{T_1 - T_2}{2} \quad \text{(Neglecting centrifugal tension)}$$

$$T_0 = \frac{T_1 + T_2 + 2T_c}{2} \quad \text{(Considering centrifugal tension)}$$

Problems:

1. In a horizontal belt drive for a centrifugal blower, the blower is belt driven At 600 r.p.m. by a 15 kW, 1750 r.p.m. electric motor. The centre distance is twice the diameter of the larger pulley. The density of the belt material = 1500 kg/m; maximum allowable stress = 4 MPa;μ1 = 0.5 (motor pulley); μ2= 0.4 (blower pulley); peripheral velocity of the belt = 20 m/s. Determine the following:

1. Pulley diameters, 2. Belt length, 3. Cross-sectional area of the belt;

4. Minimum initial tension for operation without slip; and 5. Resultant force in the plane of the blower when operating with an initial tension 50 per cent greater than the minimum value.

Solution.

Solution.

N2 = 600 r.p.m. ;

P = 15 kW = 15 × 10 W;

N1 = 1750 r.p.m . ;ρ = 1500 kg/m^3

σ = 4 MPa = 4 × 10^6 N/m^2 ,

μ1 = 0.5 ; μ2 = 0.4 ;

v = 20 m/s

Fig. Shows a horizontal belt drive. Suffix 1 refers to a motor pulley and suffix 2 refers to a blower pulley.

1. *Pulley diameters*

Let d_1 = Diameter of the motor pulley, and

d_2 = Diameter of the blower pulley.

We know that peripheral velocity of the belt (v),

$$20 = \frac{\pi d_1 N_1}{60} = \frac{\pi d_1 \times 1750}{60} = 91.64\, d_1$$

$$\therefore \quad d_1 = 20 / 91.64 = 0.218 \text{ m} = 218 \text{ mm} \quad \textbf{Ans.}$$

We also know that $\dfrac{N_2}{N_1} = \dfrac{d_1}{d_2}$

$$\therefore \quad d_2 = \frac{d_1 \times N_1}{N_2} = \frac{218 \times 1750}{600} = 636 \text{ mm} \quad \textbf{Ans.}$$

2. *Belt length*

Since the centre distance (x) between the two pulleys is twice the diameter of the larger pulley (*i.e.* $2\, d_2$), therefore centre distance,

$$x = 2\, d_2 = 2 \times 636 = 1272 \text{ mm}$$

We know that length of belt,

$$L = \frac{\pi}{2}(d_1 + d_2) + 2\,x + \frac{(d_1 - d_2)^2}{4x}$$

$$= \frac{\pi}{2}(218 + 636) + 2 \times 1272 + \frac{(218 - 636)^2}{4 \times 1272}$$

$$= 1342 + 2544 + 34 = 3920 \text{ mm} = 3.92 \text{ m} \quad \textbf{Ans.}$$

3. *Cross-sectional area of the belt*

Let a = Cross-sectional area of the belt.

First of all, let us find the angle of contact for both the pulleys. From the geometry of the figure, we find that

$$\sin\alpha = \frac{O_2M}{O_1O_2} = \frac{r_2 - r_1}{x} = \frac{d_2 - d_1}{2\,x} = \frac{636 - 218}{2 \times 1272} = 0.1643$$

$$\therefore \quad \alpha = 9.46°$$

We know that angle of contact on the motor pulley,

$$\theta_1 = 180° - 2\alpha = 180 - 2 \times 9.46 = 161.08°$$

$$= 161.08 \times \pi / 180 = 2.8 \text{ rad}$$

and angle of contact on the blower pulley,

$$\theta_2 = 180° + 2\alpha = 180 + 2 \times 9.46 = 198.92°$$

$$= 198.92 \times \pi / 180 = 3.47 \text{ rad}$$

Since both the pulleys have different coefficient of friction (μ), therefore the design will refer to a pulley for which $\mu.\theta$ is small.

$\therefore$ For motor pulley,

$$\mu_1.\theta_1 = 0.5 \times 2.8 = 1.4$$

and for blower pulley, $\mu_2.\theta_2 = 0.4 \times 3.47 = 1.388$

Since $\mu_2.\theta_2$ for the blower pulley is less then $\mu_1.\theta_1$, therefore the design is based on the blower pulley.

Let T_1 = Tension in the tight side of the belt, and

T_2 = Tension in the slack side of the belt.

We know that power transmitted (P),

$$15 \times 10^3 = (T_1 - T_2)\, v = (T_1 - T_2)\, 20$$

$$\therefore \quad T_1 - T_2 = 15 \times 10^3 / 20 = 750 \text{ N} \qquad \text{...(i)}$$

We also know that

$$2.3 \log\left(\frac{T_1}{T_2}\right) = \mu_2.\theta_2 = 0.4 \times 3.47 = 1.388$$

$$\therefore \quad \log\left(\frac{T_1}{T_2}\right) = \frac{1.388}{2.3} = 0.6035 \quad \text{or} \quad \frac{T_1}{T_2} = 4 \qquad \text{...(ii)}$$

... (Taking antilog of 0.6035)

From equations (*i*) and (*ii*),

$$T_1 = 1000 \text{ N ; and } T_2 = 250 \text{ N}$$

Mass of the belt per metre length,

$$m = \text{Area} \times \text{length} \times \text{density} = a \times l \times \rho$$
$$= a \times 1 \times 1500 = 1500\, a \text{ kg / m}$$

∴ Centrifugal tension,

$$T_C = m.v^2 = 1500\, a\, (20)^2 = 0.6 \times 10^6\, a \text{ N}$$

We know that maximum or total tension in the belt,

$$T = T_1 + T_C = 1000 + 0.6 \times 10^6\, a \text{ N} \quad \text{...(iii)}$$

We also know that maximum tension in the belt,

$$T = \text{Stress} \times \text{area} = \sigma \times a = 4 \times 10^6\, a \text{ N} \quad \text{...(iv)}$$

4. *Minimum initial tension for operation without slip*

We know that centrifugal tension,

$$T_C = 0.6 \times 10^6\, a = 0.6 \times 10^6 \times 294 \times 10^{-6} = 176.4 \text{ N}$$

∴ Minimum initial tension for operation without slip,

$$T_0 = \frac{T_1 + T_2 + 2T_C}{2} = \frac{1000 + 250 + 2 \times 176.4}{2} = 801.4 \text{ N}$$ **Ans.**

5. *Resultant force in the plane of the blower when operating with an initial tension 50 per cent greater than the minimum value*

We have calculated above that the minimum initial tension,

$$T_0 = 801.4 \text{ N}$$

∴ Increased initial tension,

$$T_0' = 801.4 + 801.4 \times \frac{50}{100} = 1202 \text{ N}$$

Let T_1' and T_2' be the corresponding tensions in the tight side and slack side of the belt respectively.

We know that increased initial tension (T_0'),

$$1202 = \frac{T_1' + T_2' + 2T_C}{2} = \frac{T_1' + T_2' + 2 \times 176.4}{2}$$

$$\therefore \quad T_1' + T_2' = 1202 \times 2 - 2 \times 176.4 = 2051.2 \text{ N} \quad \text{...(v)}$$

Since the ratio of tensions will be constant, *i.e.* $\frac{T_1'}{T_2'} = \frac{T_1}{T_2} = 4$, therefore from equation (v), we have

$$4T_2' + T_2' = 2051.2 \text{ or } T_2' = 2051.2 / 5 = 410.24 \text{ N}$$

and $$T_1' = 4\, T_2' = 4 \times 410.24 = 1640.96 \text{ N}$$

∴ Resultant force in the plane of the blower

$$= T_1' - T_2' = 1640.96 - 410.24 = 1230.72 \text{ N}$$ **Ans.**

2. A belt 100 mm wide and 10 mm thick is transmitting power at 1000 meters/min. The net driving tension is 1.8 times the tension on the slack side. If the safe permissible stress on the belt section in 1.6 MPa, calculate the maximum power that can be transmitted at this speed. Assume density of the leather as 1000 kg/m^3.Calculate the absolute maximum power that can be transmitted by this belt and the speed at which this can be transmitted.

Solution. Given : $b = 100$ mm $= 0.1$ m ; $t = 10$ mm $= 0.01$ m ; $v = 1000$ m/min $= 16.67$ m/s ; $T_1 - T_2 = 1.8\, T_2$; $\sigma = 1.6$ MPa $= 1.6$ N/mm^2 ; $\rho = 1000$ kg/m^3

Power transmitted

Let T_1 = Tension in the tight side of the belt, and

T_2 = Tension in the slack side of the belt.

We know that the maximum tension in the belt,

$$T = \sigma.b.t = 1.6 \times 100 \times 10 = 1600 \text{ N}$$

Mass of the belt per metre length,

$$m = \text{Area} \times \text{length} \times \text{density} = b \times t \times l \times \rho$$
$$= 0.1 \times 0.01 \times 1 \times 1000 = 1 \text{ kg/m}$$

∴ Centrifugal tension,

$$T_C = m.v^2 = 1\ (16.67)^2 = 278 \text{ N}$$

We know that

$$T_1 = T - T_C = 1600 - 278 = 1322 \text{ N}$$

and $$T_1 - T_2 = 1.8\ T_2$$

$$\therefore \quad T_2 = \frac{T_1}{2.8} = \frac{1322}{2.8} = 472 \text{ N}$$

We know that the power transmitted.

$$P = (T_1 - T_2)\ v = (1322 - 472)\ 16.67 = 14\ 170 \text{ W} = 14.17 \text{ kW}$$ **Ans.**

Speed at which absolute maximum power can be transmitted

We know that the speed of the belt for maximum power,

$$v = \sqrt{\frac{T}{3m}} = \sqrt{\frac{1600}{3 \times 1}} = 23.1 \text{ m/s}$$ **Ans.**

Absolute maximum power

We know that for absolute maximum power, the centrifugal tension,

$$T_C = T / 3 = 1600 / 3 = 533 \text{ N}$$

∴ Tension in the tight side,

$$T_1 = T - T_C = 1600 - 533 = 1067 \text{ N}$$

and tension in the slack side,

$$T_2 = \frac{T_1}{2.8} = \frac{1067}{2.8} = 381 \text{ N}$$

∴ Absolute maximum power transmitted,

$$P = (T_1 - T_2)\ v = (1067 - 381)\ 23.1 = 15\ 850 \text{ W} = 15.85 \text{ kW}$$ **Ans.**

An electric motor drives an exhaust fan. Following data are provided :

	Motor pulley	*Fan pulley*
Diameter	*400 mm*	*1600 mm*
Angle of warp	*2.5 radians*	*3.78 radians*
Coefficient of friction	*0.3*	*0.25*
Speed	*700 r.p.m.*	—
Power transmitted	*22.5 kW*	—

Calculate the width of 5 mm thick flat belt. Take permissible stress for the belt material as 2.3 MPa.

Solution. Given : $d_1 = 400$ mm or $r_1 = 200$ mm ; $d_2 = 1600$ mm or $r_2 = 800$ mm ; $\theta_1 = 2.5$ rad ; $\theta_2 = 3.78$ rad ; $\mu_1 = 0.3$; $\mu_2 = 0.25$; $N_1 = 700$ r.p.m. ; $P = 22.5$ kW $= 22.5 \times 10^3$ W ; $t = 5$ mm $= 0.005$ m ; $\sigma = 2.3$ MPa $= 2.3 \times 10^6$ N/m^2

Fig. 18.19 shows a system of flat belt drive. Suffix 1 refers to motor pulley and suffix 2 refers to fan pulley.

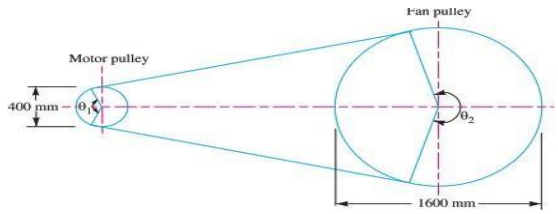

We have discussed in Art. 18.19 (Note 2) that when the pulleys are made of different material [*i.e.* when the pulleys have different coefficient of friction (μ) or different angle of contact (θ), then the design will refer to a pulley for which $\mu.\theta$ is small.

$\therefore$ For motor pulley, $\mu_1.\theta_1 = 0.3 \times 2.5 = 0.75$

and for fan pulley, $\mu_2.\theta_2 = 0.25 \times 3.78 = 0.945$

Since $\mu_1.\theta_1$ for the motor pulley is small, therefore the design is based on the motor pulley.

Let T_1 = Tension in the tight side of the belt, and

T_2 = Tension in the slack side of the belt.

We know that the velocity of the belt,

$$v = \frac{\pi\, d_1.N_1}{60} = \frac{\pi \times 0.4 \times 700}{60} = 14.7 \text{ m/s} \quad \text{... } (d_1 \text{ is taken in metres})$$

and the power transmitted (P),

$$22.5 \times 10^3 = (T_1 - T_2)\, v = (T_1 - T_2)\, 14.7$$

$$\therefore \quad T_1 - T_2 = 22.5 \times 10^3 / 14.7 = 1530 \text{ N} \quad \text{...(i)}$$

We know that

$$2.3 \log\left(\frac{T_1}{T_2}\right) = \mu_1.\theta_1 = 0.3 \times 2.5 = 0.75$$

$$\therefore \quad \log\left(\frac{T_1}{T_2}\right) = \frac{0.75}{2.3} = 0.3261 \text{ or } \frac{T_1}{T_2} = 2.12 \quad \text{...(ii)}$$

... (Taking antilog of 0.3261)

From equations (*i*) and (*ii*), we find that

$$T_1 = 2896 \text{ N}; \text{ and } T_2 = 1366 \text{ N}$$

Let b = Width of the belt in metres.

Since the velocity of the belt is more than 10 m/s, therefore centrifugal tension must be taken into consideration. Assuming a leather belt for which the density may be taken as 1000 kg / m^3.

$\therefore$ Mass of the belt per metre length,

$$m = \text{Area} \times \text{length} \times \text{density} = b \times t \times l \times \rho$$

$$= b \times 0.005 \times 1 \times 1000 = 5\, b \text{ kg/m}$$

and centrifugal tension, $T_C = m.v^2 = 5\, b\, (14.7)^2 = 1080\, b$ N

We know that the maximum (or total) tension in the belt,

$$T = T_1 + T_C = \text{Stress} \times \text{Area} = \sigma.b.t$$

or $$2896 + 1080\, b = 2.3 \times 10^6\, b \times 0.005 = 11\,500\, b$$

$\therefore$ $11\,500\, b - 1080\, b = 2896$ or $b = 0.278$ say 0.28 m or 280 mm **Ans.**

3. A belt is required to transmit 18.5 kW from a pulley of 1.2 m diameter running at 250rpm to another pulley which runs at 500 rpm. The distance between the centers of pulleys is 2.7 m. The following data refer to an open belt drive, = 0.25. Safe working stress for leather is 1.75 N/mm2. Thickness of belt = 10mm. Determine the width and length of belt taking centrifugal tension into account. Also find the initial tension in the belt and absolute power that can be transmitted by this belt and the speed at which this can be transmitted.

Data:

Open belt drive; N = 18.5 kW; n_1 = 500 rpm = Speed of smaller pulley;

d_2 = 1.2 m = 1200 mm = D = Diameter of larger pulley; n_2 = 250 rpm = Speed of larger pulley;

C = 2.7 m = 2700 mm; μ = 0.25; σ_1 = 1.75 N/mm^2; t = 10 mm

(i) **Diameter of smaller pulley**

$$n_1 d_1 = n_2 d_2$$
$$500 \times d_1 = 250 \times 1200$$
$$\therefore \text{Diameter of smaller pulley } \mathbf{d_1 = 600\ mm = d}$$

(ii) **Velocity**

$$v = \frac{\pi(D+t)n_2}{60{,}000} = \frac{\pi(1200+10)250}{60{,}000} = 15.839 \text{ m/sec.}$$

(iii) Centrifugal stress

$$\sigma_c = \frac{wv^2}{g} \times 10^6$$

Assume specific weight of leather as 10×10^{-6} N/mm³

$$\therefore \sigma_c = \frac{10 \times 10^{-6}}{9810} \times 15.839^2 \times 10^6 = 0.25573 \text{ N/mm}^2$$

(iv) **Capacity**

Since coefficient of friction is same for both smaller and larger pulleys, capacity $= e^{\mu\theta_s}$

$$\text{i.e., } e^{\mu\theta} = e^{\mu\theta_s}$$

$$\theta_s = \pi - \left\{2\sin^{-1}\left(\frac{D-d}{2C}\right)\right\}\frac{\pi}{180}$$

$$= \pi - \left\{2\sin^{-1}\left(\frac{1200-600}{2\times 2700}\right)\right\}\frac{\pi}{180} = 2.92 \text{ radians}$$

$$\therefore e^{\mu\theta} = e^{0.25\times 2.92} = 2.075$$

(v) Constant

$$k = \frac{e^{\mu\theta}-1}{e^{\mu\theta}} = \frac{2.075-1}{2.075} = 0.52$$

(vi) Width of belt

$$\text{Power transmitted per mm}^2 \text{ area} = \frac{(\sigma_1 - \sigma_c)kv}{1000}$$

$$= \frac{(1.75-0.25573)0.52\times 15.839}{1000} = 0.01231 \text{ kW}$$

(ix) Absolute power

For maximum power transmission

$$\sigma_c = \frac{\sigma_1}{3} = \frac{1.75}{3} = 0.5833 \text{ N/mm}^2$$

$$\text{Also } \sigma_c = \frac{w}{g}v^2 \times 10^6$$

$$\therefore 0.5833 = \frac{10\times 10^{-6}}{9810} \times v^2 \times 10^6$$

$$\therefore \mathbf{v = 23.92 \text{ m/sec}}$$

$$\therefore \text{Power transmitted} \backslash \text{mm}^2 = \frac{(\sigma_1 - \sigma_C)kv}{1000}$$

$$= \frac{(1.75-0.5833)0.52\times 23.92}{1000}$$

$$= 0.0145 \text{ kW}$$

$$\therefore \text{Total absolute power} = \text{Area of c/s of belt} \times \text{power per mm}^2$$

$$= 1503.18 \times 0.0145 = 21.7961 \text{ kW}$$

$$\therefore \text{Absolute power} = 21.8 \text{ kW.}$$

4. Select a V-belt drive to transmit 10 kW of power from a pulley of 200 mm diameter mounted on an electric motor running at 720 rpm to another pulley mounted on compressor running at 200 rpm. The service is heavy duty varying from 10 hours to 14 hours per day and centre distance between centres of pulleys is 600 mm.

Data :

$$N = 10\text{ kW};\ d_1 = 200\text{ mm} = d;\ n_1 = 720\text{ rpm};\ n_2 = 200\text{ rpm};\ C = 600\text{ mm}$$

Heavy duty 10 hours to 14 hours per day.

Solution :

i. Diameter of larger pulley

$$n_1 d_1 = n_2 d_2$$

$$720 \times 200 = 200 \times d_2$$

$$\therefore\ d_2 = 720\text{ mm} = D = \text{diameter of larger pulley}$$

ii. Select the cross-section of belt

Equivalent Pitch diameter of smaller pulley $d_e = d_p F_b$ where $d_p = d_1 = 200$ mm

$$\frac{n_1}{n_2} = \frac{720}{200} = 3.6$$

From Table when $\frac{n_1}{n_2} = 3.6$

Smaller diameter factor $F_b = 1.14$

$$\therefore\ d_e = 200 \times 1.14 = 228\text{ mm.}$$

iii. Velocity

$$v = \frac{\pi d_1 n_1}{60000} = \frac{\pi \times 200 \times 720}{60000} = 7.54\text{ m/sec}$$

iv. Power capacity

For 'C' cross-section belt

$$N^* = v\left[\frac{1.47}{V^{0.09}} - \frac{143.27}{d_e} - \frac{2.34v^2}{10^4}\right]$$

$$= 7.54\left[\frac{1.47}{7.54^{0.09}} - \frac{143.27}{228} - \frac{2.34 \times 7.54^2}{10^4}\right]$$

$$N^* = 4.4\text{ kW}$$

Number of bolts:

$$i = \frac{NF_a}{N^* F_c . F_d}$$

for heavy duty 10 – 14 hours/day correction factor for service $F_a = 1.3$

$$L = 2C + \frac{\pi}{2}(D+d) + \frac{(D-d)^2}{4C}$$

$$= 2 \times 600 + \frac{\pi}{2}(720+200) + \frac{(720-200)^2}{4 \times 600} = 2757.8\text{ mm}$$

The nearest standard value of nominal pitch length for the selected C- cross section belt L = 2723 mm ,Nominal inside length = 2667 mm, For nominal inside length = 2667 mm, and C-cross section belt, correction factor for length Fe = 0.94

$$\text{Angle of contact } \theta = 2\cos^{-1}\left(\frac{D-d}{2C}\right)$$

$$= 2\cos^{-1}\left(\frac{720-200}{2\times 600}\right) = 128.64°$$

From Table when $\theta = 128.64°$

Correction factor for angle of contact $F_d = 0.86$ (Assume V-V belt)

$$\therefore\ i = \frac{10\times 1.3}{4.4\times 0.94\times 0.86} = 3.655$$

$\therefore$ Number of V belts $\mathbf{i = 4}$

Types of Pulleys for Flat Belts:

Following are the various types of pulleys for flat belts:

1. Cast iron pulleys, 2. Steel pulleys, 3. Wooden pulleys, 4. Paper pulleys and 5. Fast and loose pulleys.

Design of Cast Iron Pulleys

1. Dimensions of pulley

(i) The diameter of the pulley (D) may be obtained either from velocity ratio consideration or centrifugal stress consideration. We know that the centrifugal stress induced in the rim of the pulley,

$$\sigma_t = \rho . v^2$$

where

ρ = Density of the rim material

= 7200 kg/m^3 for cast iron

v = Velocity of the rim = πDN / 60, D being the diameter of pulley and

N is speed of the pulley.

The following are the diameter of pulleys in mm for flat and V-belts.

20, 22, 25, 28, 32, 36, 40, 45, 50, 56, 63, 71, 80, 90, 100, 112, 125, 140, 160, 180, 200, 224,250, 280, 315, 355, 400, 450, 500, 560, 630, 710, 800, 900, 1000, 1120, 1250, 1400, 1600, 1800,2000, 2240, 2500, 2800, 3150, 3550, 4000, 5000, 5400.

The first six sizes (20 to 36 mm) are used for V-belts only.

The first six sizes (20 to 36 mm) are used for V-belts only.

B = 1.25 b ; where b = Width of belt.

(iii) The thickness of the pulley rim (t) varies from

$\frac{D}{300} + 2$ mm to $\frac{D}{300} + 3$ for single belt

$\frac{D}{300} + 6$ mm for double belt.

The diameter of the pulley (D) is in mm.

2. Dimensions of arms

(i) The number of arms may be taken as 4 for pulley diameter from 200 mm to 600 mm and 6 for diameter from 600 mm to 1500 mm.

(ii) The cross-section of the arms is usually elliptical with major axis (a1) equal to twice the minor axis (b1). The cross-section of the arm is obtained by considering the arm as cantilever i.e. fixed at the hub end and carrying a concentrated load at the rim end. The length of the cantilever is taken equal to the radius of the pulley. It is further assumed that at any given time, the power is transmitted from the hub to the rim or vice versa, through only half the total number of arms.

T = Torque transmitted,

R = Radius of pulley, and

n = Number of arms,

∴ Tangential load per arm,

$$W_T = \frac{T}{R \times n / 2} = \frac{2T}{R \cdot n}$$

Maximum bending moment on the arm at the hub end,

$$M = \frac{2T}{R \times n} \times R = \frac{2T}{n}$$

and section modulus,

$$Z = \frac{\pi}{32} \times b_1 (a_1)^2$$

Now using the relation,

σ_b or σ_t = M / Z, the cross-section of the arms is

(iii) The arms are tapered from hub to rim. The taper is usually

/48 to 1/32.

(iv) When the width of the pulley exceeds the diameter of the pulley, then two rows of arms are provided, as shown in Fig. 19.4. This is done to avoid heavy arms in one row.

3. Dimensions of hub

(i) The diameter of the hub (d1) in terms of shaft diameter (d) may be fixed by the following relation :

d1= 1.5 d + 25 mm

The diameter of the hub should not be greater than 2 d.

(ii) The length of the hub,

$$L = \frac{\pi}{2} \times d$$

The minimum length of the hub is $\frac{2}{3}$ B but it should not be more than width of the pulley (B).

Advantages and Disadvantages of V-belt Drive over Flat Belt Drive

Advantages

1. The V-belt drive gives compactness due to the small distance between centres of pulleys.

2. The drive is positive, because the slip between the belt and the pulley groove is negligible.

3. Since the V-belts are made endless and there is no joint trouble, therefore the drive is smooth.

4. It provides longer life, 3 to 5 years.

5. It can be easily installed and removed.

6. The operation of the belt and pulley is quiet.

7. The belts have the ability to cushion the shock when machines are started.

8. The high velocity ratio (maximum 10) may be obtained.

9. The wedging action of the belt in the groove gives high value of limiting *ratio of tensions. Therefore the power transmitted by V-belts is more than flat belts for the same coefficient of friction, arc of contact and allowable tension in the belts.

10. The V-belt may be operated in either direction, with tight side of the belt at the top or bottom. The centre line may be horizontal, vertical or inclined.

Disadvantages

1. The V-belt drive cannot be used with large centre distances, because of larger weight per unit length.

2. The V-belts are not so durable as flat belts.

3. The construction of pulleys for V-belts is more complicated than pulleys of flat belts.

4. Since the V-belts are subjected to certain amount of creep, therefore these are not suitable for constant speed applications such as synchronous machines and timing devices.

5. The belt life is greatly influenced with temperature changes, improper belt tension and mismatching of belt lengths.

6. The centrifugal tension prevents the use of V-belts at speeds below 5 m / s and above 50 m / s.

Ratio of Driving Tensions for V-belt

R1= Normal reactions between belts and sides of the groove.

R = Total reaction in the plane of the groove.

μ = Coefficient of friction between the belt and sides of the groove.

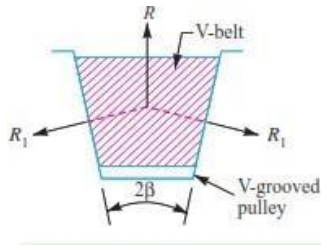

$$2.3 \log (T_1 / T_2) = \mu.\theta \operatorname{cosec} \beta$$

5. A V-belt is driven on a flat pulley and a V-pulley. The drive transmits 20 kW from a 250 mm diameter V-pulley operating at 1800 r.p.m. to a 900 mm diameter flat pulley. The centre distance is 1 m, the angle of groove 40° and μ = 0.2. If density of belting is 1110 kg / m and allowable stress is 2.1 MPa for belt material, what will be the number of belts required if C-size V-belts having 230 mm^3 cross-sectional areas are used.

Solution. Given : $P = 20$ kW ; $d_1 = 250$ mm $= 0.25$ m ; $N_1 = 1800$ r.p.m. ; $d_2 = 900$ mm $= 0.9$ m ; $x = 1$ m $= 1000$ mm ; $2\beta = 40°$ or $\beta = 20°$; $\mu = 0.2$; $\rho = 1110$ kg/m^3 ; $\sigma = 2.1$ MPa $= 2.1$ N/mm^2 ; $a = 230$ mm$^2 = 230 \times 10^{-6}$ m^2

$$\sin\alpha = \frac{O_2M}{O_1O_2} = \frac{r_2 - r_1}{x} = \frac{d_2 - d_1}{2x} = \frac{900 - 250}{2 \times 1000} = 0.325$$

$$\alpha = 18.96°$$

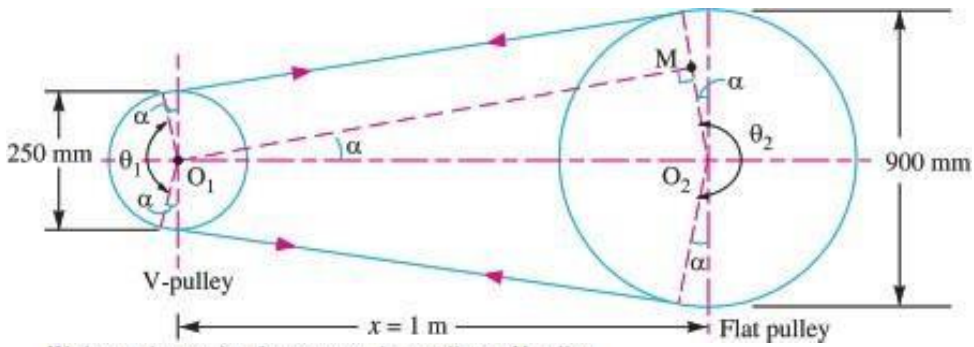

We know that angle of contact on the smaller or V-pulley,

$$\theta_1 = 180° - 2\alpha = 180° - 2 \times 18.96 = 142.08°$$
$$= 142.08 \times \pi/180 = 2.48 \text{ rad}$$

and angle of contact on the larger or flat pulley,

$$\theta_2 = 180° + 2\alpha = 180° + 2 \times 18.96 = 217.92°$$
$$= 217.92 \times \pi / 180 = 3.8 \text{ rad}$$

We have already discussed that when the pulleys have different angle of contact (θ), then the design will refer to a pulley for which μ.θ is small.

We know that for a smaller or V-pulley,

$$\mu.\theta = \mu.\theta_1 \operatorname{cosec}\beta = 0.2 \times 2.48 \times \operatorname{cosec} 20° = 1.45$$

and for larger or flat pulley,

$$\mu.\theta = \mu.\theta_2 = 0.2 \times 3.8 = 0.76$$

Since (μ.θ) for the larger or flat pulley is small, therefore the design is based on the larger or flat pulley.

We know that peripheral velocity of the belt,

$$v = \frac{\pi d_1 N_1}{60} = \frac{\pi \times 0.25 \times 1800}{60} = 23.56 \text{ m/s}$$

Mass of the belt per metre length,

$$m = \text{Area} \times \text{length} \times \text{density} = a \times l \times \rho$$
$$= 230 \times 10^{-6} \times 1 \times 1100 = 0.253 \text{ kg / m}$$

∴ Centrifugal tension,

$$T_C = m.v^2 = 0.253\ (23.56)^2 = 140.4 \text{ N}$$

Let T_1 = Tension in the tight side of the belt, and

T_2 = Tension in the slack side of the belt.

We know that maximum tension in the belt,

$$T = \text{Stress} \times \text{area} = \sigma \times a = 2.1 \times 230 = 483 \text{ N}$$

We also know that maximum or total tension in the belt,

$$T = T_1 + T_C$$

$$\therefore \quad T_1 = T - T_C = 483 - 140.4 = 342.6 \text{ N}$$

We know that

$$2.3 \log\left(\frac{T_1}{T_2}\right) = \mu.\theta_2 = 0.2 \times 3.8 = 0.76$$

$$\log\left(\frac{T_1}{T_2}\right) = 0.76 / 2.3 = 0.3304 \quad \text{or} \quad \frac{T_1}{T_2} = 2.14 \qquad \text{...(Taking antilog of 0.3304)}$$

and $$T_2 = T_1 / 2.14 = 342.6 / 2.14 = 160 \text{ N}$$

∴ Power transmitted per belt

$$= (T_1 - T_2)\ v = (342.6 - 160)\ 23.56 = 4302 \text{ W} = 4.302 \text{ kW}$$

We know that number of belts required

$$= \frac{\text{Total power transmitted}}{\text{Power transmitted per belt}} = \frac{20}{4.302} = 4.65 \text{ say } 5 \textbf{ Ans.}$$

Rope Drives:

The ropes drives use the following two types of ropes :

1. Fibre ropes, and 2. *Wire ropes.

The fibre ropes operate successfully when the pulleys are about 60 metres apart, while the wire ropes are used when the pulleys are upto 150 metres apart.

Advantages of Fibre Rope Drives

The fibre rope drives have the following advantages :

1. They give smooth, steady and quiet service.

2. They are little affected by out door conditions.

3. The shafts may be out of strict alignment.

4. The power may be taken off in any direction and in fractional parts of the whole amount.

5. They give high mechanical efficiency.

Sheave for Fibre Ropes

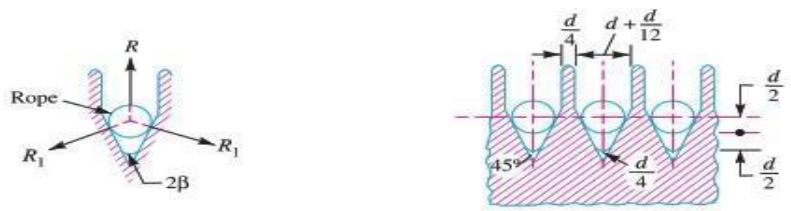

(a) Cross-section of a rope. (b) Sheave (grooved pulley) for ropes.

Ratio of Driving Tensions for Fibre Rope

$$2.3 \log \left(\frac{T_1}{T_2}\right) = \mu.\theta \operatorname{cosec} \beta$$

where μ, θ and β have usual meanings..

6. A pulley used to transmit power by means of ropes has a diameter of 3.6 metres and has 15 grooves of 45° angle. The angle of contact is 170° and the coefficient of friction between the ropes and the groove sides is 0.28. The maximum possible tension in the ropes is 960 N and the mass of the rope is 1.5 kg per metre length. Determine the speed of the pulley in r.p.m. and the power transmitted if the condition of maximum power prevail.

Solution. Given : $d = 3.6$ m ; $n = 15$; $2\beta = 45°$ or $\beta = 22.5°$; $\theta = 170° = 170 \times \pi / 180 = 2.967$ rad ; $\mu = 0.28$; $T = 960$ N ; $m = 1.5$ kg / m

Solution. Given : $d = 3.6$ m ; $n = 15$; $2\beta = 45°$ or $\beta = 22.5°$; $\theta = 170° = 170 \times \pi / 180 = 2.967$ rad ; $\mu = 0.28$; $T = 960$ N ; $m = 1.5$ kg / m

Speed of the pulley

Let N = Speed of the pulley in r.p.m.

We know that for maximum power, speed of the pulley,

$$v = \sqrt{\frac{T}{3m}} = \sqrt{\frac{960}{3 \times 1.5}} = 14.6 \text{ m/s}$$

We also know that speed of the pulley (v),

$$14.6 = \frac{\pi d.N}{60} = \frac{\pi \times 3.6 \times N}{60} = 0.19\, N$$

$\therefore$ $N = 14.6 / 0.19 = 76.8$ r.p.m. **Ans.**

Power transmitted

We know that for maximum power, centrifugal tension,

$$T_C = T / 3 = 960 / 3 = 320 \text{ N}$$

$\therefore$ Tension in the tight side of the rope,

$$T_1 = T - T_C = 960 - 320 = 640 \text{ N}$$

Let T_2 = Tension in the slack side of the rope.

We know that

$$2.3 \log \left(\frac{T_1}{T_2}\right) = \mu.\theta \operatorname{cosec} \beta = 0.28 \times 2.967 \times \operatorname{cosec} 22.5° = 2.17$$

$$\therefore \quad \log \left(\frac{T_1}{T_2}\right) = \frac{2.17}{2.3} = 0.9435 \quad \text{or} \quad \frac{T_1}{T_2} = 8.78 \qquad \text{...(Taking antilog of 0.9435)}$$

and $T_2 = T_1 / 8.78 = 640 / 8.78 = 73$ N

$\therefore$ Power transmitted,

$$P = (T_1 - T_2)\, v \times n = (640 - 73)\, 14.6 \times 15 = 124\,173 \text{ W}$$

$$= 124.173 \text{ kW}$$ **Ans.**

Wire Ropes:

When a large amount of power is to be transmitted over long distances from one pulley to

another (i.e. when the pulleys are upto 150 metres apart), then wire ropes are used. The wire ropes are widely used in elevators, mine hoists, cranes, conveyors, hauling devices and suspension bridges. The wire ropes run on grooved pulleys but they rest on the bottom of the *grooves and are not wedged between the sides of the grooves

Advantages of Wire Ropes.

TUTORIAL QUESTIONS:

1. Discuss about the various types of belt drives with neat sketches?
2. On what factors do the power transmitted by belts depends?
3. Name the type of stresses induced in the wire?
4. Under what circumstances a fibre rope and a wire rope is used? What are the advantages of a wire rope over fibre rope?
5. State the advantages and disadvantages of the chain drive over belt and rope drive.
6. What is the function of spring?
7. Applications of springs?
8. The extension springs are in considerably less use than the compression springs?
9. Write the formula for springs in parallel and series?
10. Advantages and disadvantages of springs?
11. Design a belt pulley for transmitting 10kW at 180 rpm. The velocity of the belt is not to exceed 10m/s and the maximum tension is not to exceed 15N/mm width. The tension on the slack side is one half that on the tight side. Determine all the principle dimensions of the pulley.
12. An overhung pulley transmits 35kW at 240rpm. The belt drive is vertical & the angle of wrap may be taken as 1800 . The distance of the pulley centre line from the nearest bearing is 350rpm. μ =0.25. The section of the arm may be taken as elliptical, the major axis being twice the minor axis. The following stress may be taken for design purpose: Shaft & Key: Tension & Compression-80MPa; Shear-50MPa Belt: Tension-2.5MPa Pulley rim: Tension-4.5MPa Pulley arms: Tension-15MPa Determine: a. Diameter of the pulley b. Diameter of the shaft.
13. A belt, 100 x 10mm is transmitting power at 15m/s. the angle of contact on the driver (smaller) pulley is 1650 , if the permissible stress for the belt material is 2N/mm2 ; determine the power that can be transmitted at this speed. Tale the density of leather as 1000kg/m3 and coefficient of friction as 0.3. Calculate the maximum power that can be transmitted.
14. Explain what do you understand A.M Wahl's factor and state its import ants.
15. Two close coiled helical springs are compressed between two parallel plates by a load of 1 kN. The springs have a wire diameter of 10 mm and the radii of coils are 50 and 75 mm. Each spring has 10 coils and is of the same initial length. If the spring is placed inside the larger one such that both the springs are compressed by same amount, calculate (a) the total deflection, and (b) the maximum stress in each spring. Take G = 40 GPa for both the springs.

ASSIGNMENT QUESTIONS:

1. A belt, 102 x 11mm is transmitting power at 17m/s. the angle of contact on the driver (smaller) pulley is 1550, if the permissible stress for the belt material is $2N/mm^2$; determine the power that can be transmitted at this speed. Tale the density of leather as 1000kg/m3 and coefficient of friction as 0.3. Calculate the maximum power that can be transmitted.
2. The layout of the leather belt drive transmitting 15 kW power is shown in Fig.1. The centre distance between the pulleys is twice the diameter of the big pulley. The belt should operate at a velocity of 20 m/s and the stresses in the belt should not exceed 2.25 MPa. The density of the leather belt is 0.95 g/cc and the coefficient of friction is 0.35. The thickness of the belt is 5 mm. Calculate: i) Diameter of the pulleys. ii) The length and width belts. iii) Belt tensions.

   Speeds are 1440 and 440.
3. A helical spring, in which the slope of the helix may be assumed small, is required to transmit a maximum pull of 1 KN and to extend 10 mm for 200 N load. If the mean diameter of the coil is to be the 80 mm, find the suitable diameter for the wire and number of coils required. Take G = 80 GPa and allowable shear stress as 100 MPa.
4. Two close coiled helical springs are compressed between two parallel plates by a load of 1 kN. The springs have a wire diameter of 10 mm and the radii of coils are 50 and 75 mm. Each spring has 10 coils and is of the same initial length. If the spring is placed inside the larger one such that both the springs are compressed by same amount, calculate

   (a) The total deflection, and

   (b) The maximum stress in each spring. Take G = 40 GPa for both the springs.

   (c) The maximum stress in each spring. Take G = 40 GPa for both the springs.
5. a) Explain what do you understand A.M Wahl's factor graph.

   b) Classifications of springs?

UNIT- 1

DESIGN OF FLEXIBLE DRIVES

MRCET CAMPUS

UGC Autonomous

DEPARTMENT OF MECHANICAL ENGINEERING

INTRODUCTION

- The belts or ropes are used to transmit power from one shaft to another by means of pulleys which rotate at the same speed or at different speeds.

BELTS

TYPES OF BELTS

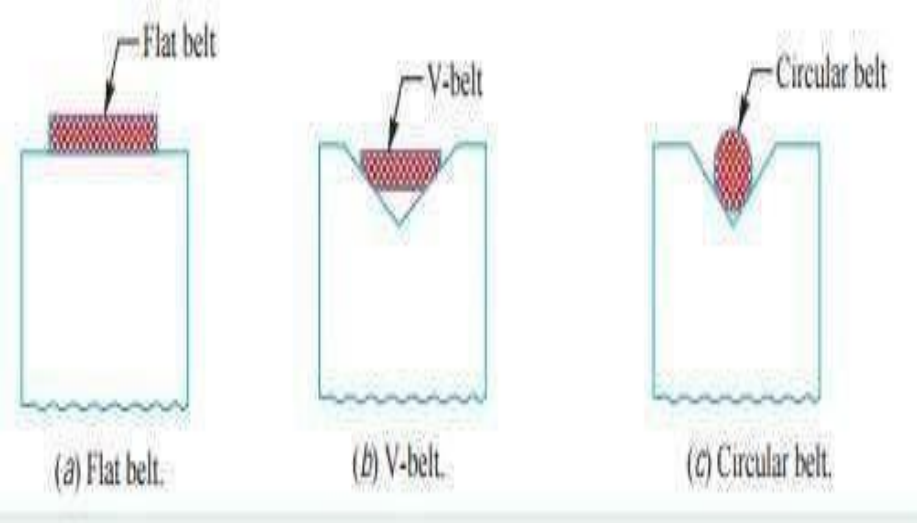

MATERIALS

- Leather Belts
- Cotton or fabric
- Rubber Belts
- Balata Belts

TYPES OF FLAT BELT DRIVE

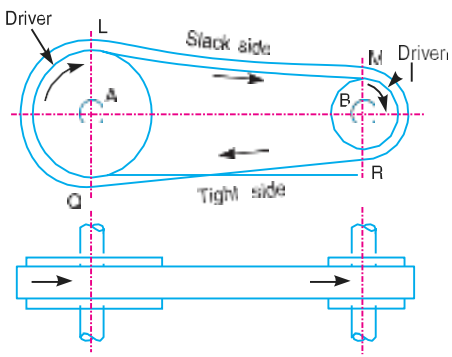

OPEN BELT DRIVE

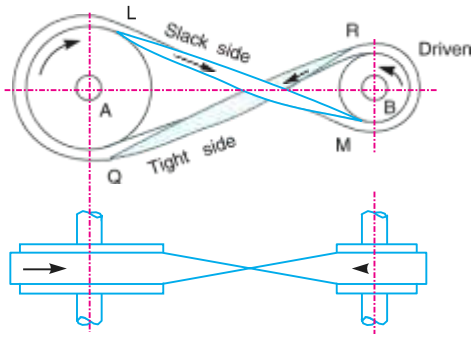

CROSS BELT DRIVE

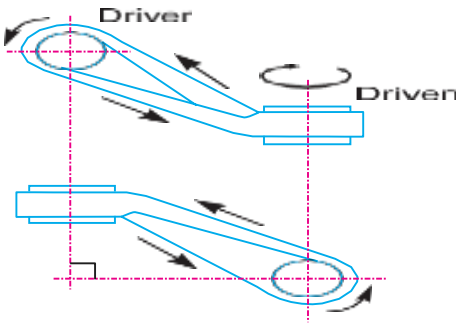

QUARTER BELT DRIVE

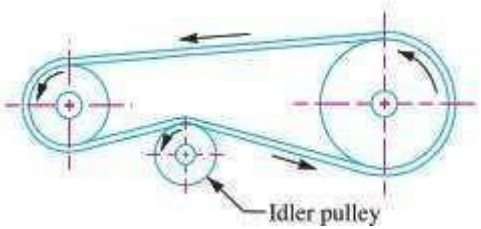

BELT DRIVE WITH IDLER

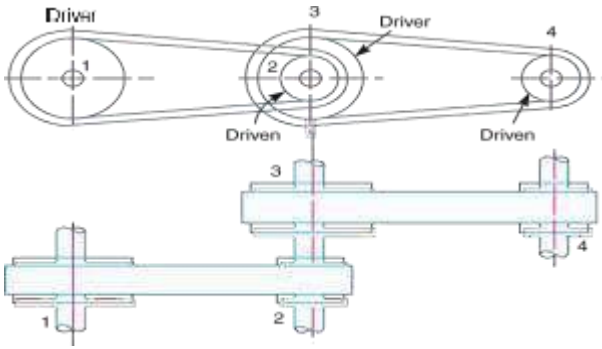

STEPPED OR CONE PULLEY DRIVE

BELTS

$$\therefore \text{ Velocity ratio, } \frac{N_2}{N_1} = \frac{d_1}{d_2}$$

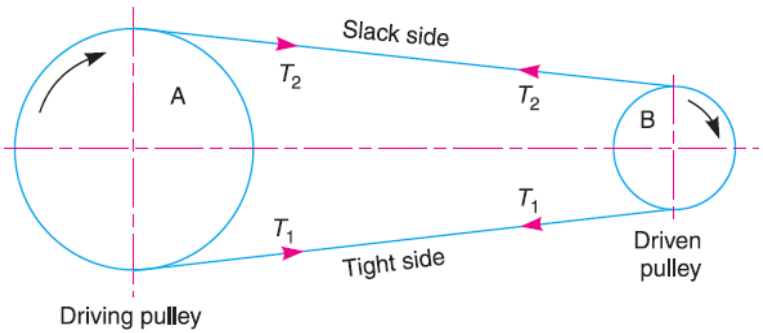

Power Transmitted by a Belt

$\therefore$ Work done per second $= (T_1 - T_2)\, v$ N-m/s

power transmitted, $P = (T_1 - T_2)\, v$ W

Length of Open belt drive

$$L = \frac{\pi}{2}(d_1 + d_2) + 2x + \frac{(d_1 - d_2)^2}{4x}$$ ...(In tern

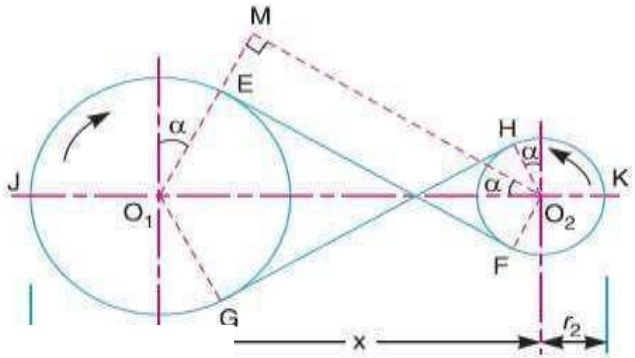

Length of cross belt drive

$$L = \frac{\pi}{2}(d_1 + d_2) + 2x + \frac{(d_1 + d_2)^2}{4x}$$ ...(In terms of pulley diameters)

BELT

Ratio of Driving Tensions For Flat Belt Drive

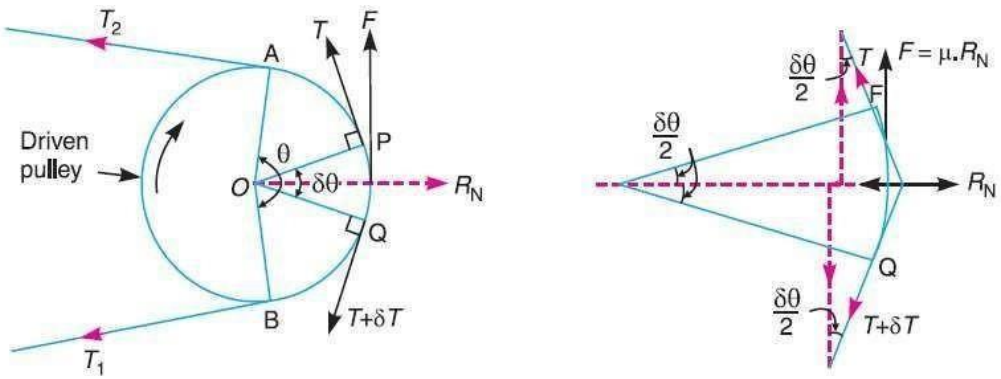

T_1 = Tension in the belt on the tight side,

T_2 = Tension in the belt on the slack side, and

θ = Angle of contact in radians (*i.e.* angle subtended by the arc AB, along which the belt touches the pulley at the centre).

$$\frac{T_1}{T_2} = e^{\mu.\theta}$$

BELT

Maximum Tension in the Belt

σ = Maximum safe stress in N/mm^2,

b = Width of the belt in mm, and

t = Thickness of the belt in mm.

T = Maximum stress × cross-sectional area of belt = $\sigma . b . t$

Initial Tension in the Belt

$$T_0 = \frac{T_1 + T_2}{2} \quad \text{...(Neglecting centrifugal tension)}$$

$$= \frac{T_1 + T_2 + 2T_C}{2} \quad \text{...(Considering centrifugal tension)}$$

UNIT 2

ENGINE PARTS

Course objectives:

- To design the engine parts like piston, connecting rod and analyze design procedure different loading conditions

Course outcomes:

Student will be able to:

- Calculate the design parameter for energy storage element and engine components, connecting rod and piston

INTRODUCTION:

The internal combustion engine, shortly called as I.C Engine is one type of engines in which the thermal and chemical energies of combustion are released inside the engine cylinder. There is another type of heat engine called External combustion engine. For example steam engine, combustion takes place outside the engine cylinder and the thermal energy is first transmitted to water outside the cylinder and steam is produced and then this energized steam is injected inside the cylinder for further operation.

The I.C engines are commonly operated by petrol even fuels like petrol, diesel and sometimes by gas. Depending on the properties of these fuels, the construction of concerned engines may be slightly changed from one to another. But , whatever be the type of engines, they have the following basic components which are i) Cylinder ii) Piston iii) Connecting rod iv) Crank shaft and v) flywheel. Apart from these main elements they have some auxiliary parts like push rod, cams, valves, springs and so on.

The I.C Engines are employed in many places like in small capacity power plants, Industries and laboratory machines and their outstanding applications are in the field of transportation like automobiles, air-crafts, rail-engines, ships and so on.

CLASSIFICATION OF I.C ENGINES

The I.C Engines are classified in many ways such as according to fuel used, method of ignition, work cycles, cylinder arrangement of applications etc:

a) According to fuel used
   i) Petrol Engine ii) Diesel Engine iii) Gas Engine
b) According to method of ignition
   i) Spark ignition engine ii) Compression ignition engine
c) According to working cycle
   i) Four stroke engine ii) Two stroke engine
d) According to cylinder arrangement
   i) Horizontal engine ii) Vertical engine iii) Inline engine
   iv) v-engine v) Radial engine
e) According to field of applications
   i) Automobile engine ii) Motor cycle engine iii) Aero engine
   iv) Locomotive engine v) Stationary engine

IC ENGINE TERMINOLOGY:

The following terms/Nomenclature associated with an engine are explained for the better understanding of the working principle of the IC engines

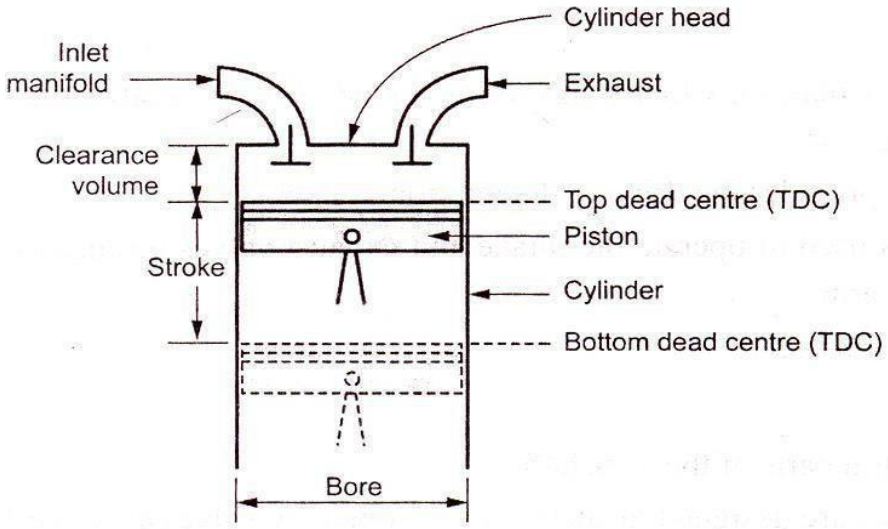

1. BORE: The nominal inside diameter of the engine cylinder is called bore.

2. TOP DEAD CENTRE (TDC): The extreme position of the piston at the top of the cylinder of the vertical engine is called top dead centre (TDC), In case of horizontal engines. It is known as inner dead centre (IDC).

3. BOTTOM DEAD CENTRE (BDC): The extreme position of the piston at the bottom of the cylinder of the vertical engine called bottom dead centre (BDC).In case of horizontal engines, it is known as outer dead center (ODC).

4. STROKE: The distance travelled by the piston from TDC to BDC is called stroke. In other words, the maximum distance travelled by the piston in the cylinder in one direction is known as stroke. It is equal to twice the radius of the crank.

5. CLEARANCE VOLUME (V_c): The volume contained in the cylinder above the top of the piston, when the piston is at top dead centre is called the clearance volume.

6. SWEPT VOLUME (V_s): The volume swept by the piston during one stroke is called the swept volume or piston displacement. Swept volume is the volume covered by the piston while moving from TDC to BDC.

i.e Swept volume = Total volume – clearance volume

7. COMPRESSION RATIO (r_c): Compression ratio is a ratio of the volume when the piston is at bottom dead centre to the volume when the piston is at top dead centre.

Mathematically,

$$r_c = \frac{\text{maximum cylinder volume}}{\text{minimum cylinder volume}} = \frac{\text{Swept volume+clearance volume}}{\text{clearance volume}}$$

S.No	Classification criteria	Types
1.	No of Strokes per cycle	1. Four Stroke Engine 2. Two Stroke Engine
2.	Types of Fuel Used	1. Petrol or Gasoline Engine 2. Diesel Engine 3. Gas Engine 4. Bi-Fuel Engine
3.	Nature of Thermodynamic Cycle	1. Otto Cycle Engine 2. Diesel Cycle Engine 3. Dual Combustion Cycle Engine
4.	Method of Ignition	1. Spark Ignition (SI) Engine 2. Compression Ignition (CI) Engine
5.	No of Cylinders	1. Single Cylinder Engine 2. Multi Cylinder Engine
6.	Arrangement of Cylinders	1. Horizontal Engine 2. Vertical Engine 3. V – Type Engine 4. Radial Engine 5. Inline Engine 6. Opposed Cylinder Engine 7. Opposed Piston Engine
7.	Cooling System	1. Air Cooled Engine 2. Water Cooled Engine
8.	Lubrication System	1. Wet Sump Lubrication System 2. Dry Sump Lubrication System
9.	Speed of the Engine.	1. Slow Speed Engine 2. Medium Speed Engine 3. High Speed Engine
10.	Location of Valves	1. Over Head Valve Engine 2. Side Valve Engine

PISTON

The piston is a disc which reciprocates within a cylinder. It is either moved by the fluid or it moves the fluid which enters the cylinder. The main function of the piston of an internal combustion engine is to receive the impulse from the expanding gas and to transmit the energy to the crankshaft through the connecting rod. The piston must also disperse a large amount of heat from the combustion chamber to the cylinder walls.

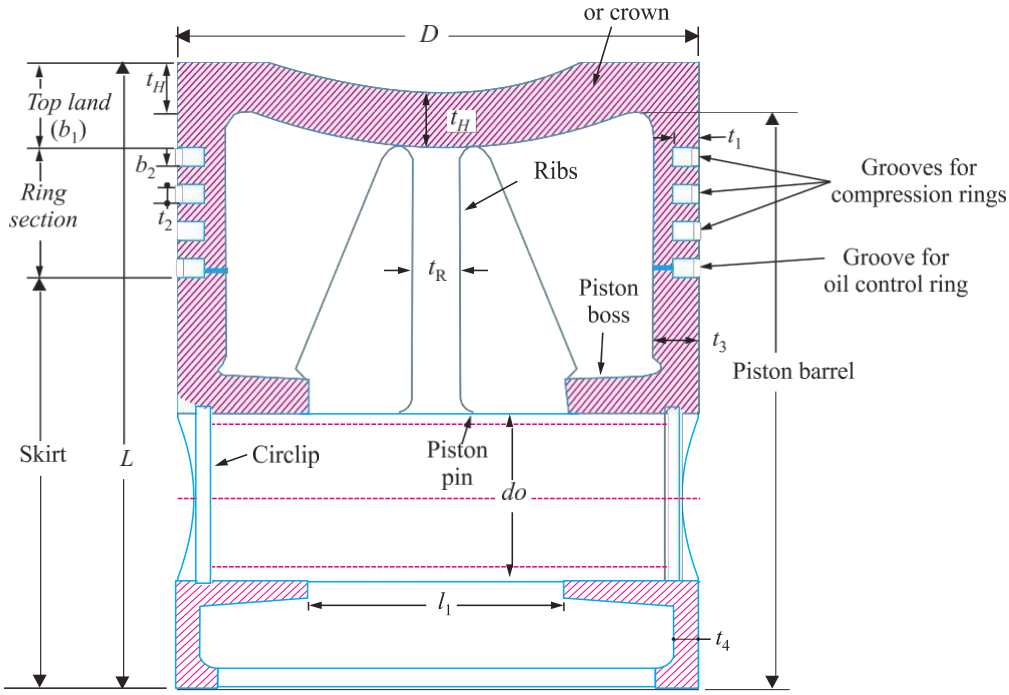

Fig: Piston for I.C Engine

The piston of internal combustion engines are usually of trunk type as shown in Fig.32.3. Such pistons are open at one end and consists of the following parts:

HEAD OR CROWN: The piston head or crown may be flat, convex or concave depending upon the design of combustion chamber. It withstands the pressure of gas in the cylinder.

PISTON RINGS: e piston rings are used to seal the cylinder in order to prevent leakage of the gas past the piston.

SKIRT: The skirt acts as a bearing for the side thrust of the connecting rod on the walls of cylinder.

PISTON PIN: It is also called ***gudgeon pin*** or ***wrist pin.*** It is used to connect the piston to the connecting rod.

DESIGN CONSIDERATIONS FOR A PISTON

In designing a piston for I.C. engine, the following points should be taken into consideration:

1. It should have enormous strength to withstand the high gas pressure and inertia forces.
2. It should have minimum mass to minimize the inertia forces.
3. It should form an effective gas and oil sealing of the cylinder.
4. It should provide sufficient bearing area to prevent undue wear.
5. It should disperse the heat of combustion quickly to the cylinder walls.
6. It should have high speed reciprocation without noise.
7. It should be of sufficient rigid construction to withstand thermal and mechanical distortion.
8. It should have sufficient support for the pistonpin.

PISTON MATERIALS

Since the piston is subjected to highly rigorous conditions, it should have enormous strength and heat resisting properties to withstand high gas pressure. Its construction should be rigid enough to withstand thermal and mechanical distortion. Also the piston should be operated with least friction

and noiseless. The material of the piston must possess good wear resisting operating temperature and it should be corrosive resistant.

The most commonly used materials for the pistons of I.C engines are cast-iron, cost-aluminium, forged aluminium, cast steel and forged steel. Cast iron pistons are used for moderate speed i.e below 6m/s and aluminium pistons are employed for higher piston speeds greater than 6 m/s.

DESIGN OF PISTON

When designing a piston, the following points must be considered such as

1. Adequate strength to withstand high pressure produced by the gas.
2. Capacity of piston to withstand high temperature.
3. Scaling of the working space against escape of gases.
4. Good dissipation of heat to the cylinder wall
5. Sufficient projected area (i.e surface area) and rigidity of the barrel.
6. Minimum loss of power due to friction.
7. Sufficient length to have better guidance and so on.

The dimensions of various parts of the trunk-type piston are determined as follows.

PISTON HEAD

The piston head or crown is designed keeping in view the following two main considerations, *i.e.*

1. It should have adequate strength to withstand the straining action due to pressure of explosion inside the engine cylinder, and
2. It should dissipate the heat of combustion to the cylinder walls as quickly as possible. On the basis of first consideration of straining action, the thickness of the piston head is determined by treating it as a flat circular plate of uniform thickness, fixed at the outer edges and subjected to a uniformly distributed load due to the gas pressure over the entire cross-section.

Based on strength consideration, the thickness of the piston head (t_1), according to Grashoff's formula is given by

$$t1 = \frac{\sqrt{3\text{pnD2}}}{16atp}\text{mm}$$

where p_m = Maximum gas pressure N/mm^2

D= Allowable of piston or cylinder bore (mm)

σ_{tp}= Allowable tensile stress of the piston material

= 35 to 40 N/mm^2 for cast iron

= 60 to 100 N/mm^2 for steel

= 50 to 90 N/mm^2 for aliminium alloy

Based on heat dissipation, the head thickness is determined as,

$$t_1 = \frac{1000H}{k(Tc-Te)} \text{ mm}$$

where H= Heat following through the head (KW)

$$H = C \times m \times C_v \times P_B$$

C =Constant (Usually 0.05). It is the piston of the hat supplied to the engine which is absorbed by the piston.

m = mass of the fuel used (i.e fuel consumption) (kg/kw/s)

C_v = Higher calorific value of the fuel (KJ/kg)

= 44 x10^3 KJ/kg for diesel fuel

= 11 x10^3 KJ/kg for petrol fuel.

P_B = Brake power of the engine per cycle (KW)

$$= \frac{P_{mb}LAn}{60000} \text{ kw}$$

P_{mb}= Brake mean effective pressure (N/mm^2)

L= stroke length (mm)

A= Area of piston at its top side (mm2)

n= Number of power strokes per minute

K= Heat conductivity factor (kw/m/^{0}C)

= 46.6 x 10^{-3} for cast iron

= 51 x 10^{-3} for steel

=175 x 10^{-3} for aluminium alloys

T_c= Temperature at the centre of piston head (^{0}C)

T_e= Temperature at the edge of piston head (^{0}C)

=75^{0}C for aluminium alloys

RIBS:

To make the piston rigid and to present distortion due to gas load and connecting rod, thrust, four to six ribs are provided at the inner of the piston. The thickness of rib is assumed as t_2= (0.3 to 0.5)t_1

Where, t_1 is thickness of the piston head.

PISTON RINGS:

To maintain the seal between the piston and the inner wall of the cylinder, some split-rings

called as piston rings are employed. By making such sealing the escape of gas through piston side-wall to the connecting rod side can be prevented. The piston rings also serve to transfer the heat from the piston head to cylinder walls.

With respect to the location of piston rings, they are called as top rings, or bottom rings. Rings inserted at the top of the piston side wall are compression rings which may be 3 to 4 for automobiles and air craft engines and 5 to 7 for stationary compression ignition engines. Rings inserted at the bottom of the piston side wall are oil scraper rings, used to scraps the oil from the surface liner so as to minimize the flow of oil into the combustion chamber. The number of oil scrapper rings may be taken as 1 to 3. In the oil rings, the bottom edge is stepped to drain the oil.

The compression rings (i.e top side piston rings) are made of rectangular cross-section and their diameters are made slightly larger than the bore diameter. A part of the ring is cut off in order to permit the ring to enter into the cylinder liner.

Due to difference of diameters between the piston rings and liner, a pressure is exerted on the liner by the piston rings. Sufficient clearance should be given, between the cut ends (i.e free ends) of the piston-rings in order to prevent the ends contact at high temperature by thermal expansion.

Usually the piston rings are made of alloy cast iron with chromium plated to possess good wear resisting qualities and spring characteristics even at high temperatures. When designing on the liner wall should be limited between 0.025 N/mm^2 and 0.042 N/mm^2.

Let t_3 = radial thickness of piston rings
t_4 = Axial thickness of piston rings
p_c= contact pressure (i.e wall pressure) in N/mm^2

Now radial thickness

$$t_3 = \frac{D\sqrt{b^2 - 4ac}}{\sigma br}$$

And the axial thickness t_4 =(0.7 to 1) t_3 or by empirical relation

$$t_4 = \frac{D}{10i}$$

Where, D = Bore diameter mm

σ_{br}= Allowable bending stress of ring material N/mm^2 = Alloy cast iron 84 to 112 N/mm^2

i = Number of rings.

Due to some advantages like, better scaling action, less wear of lands etc,. Usually thinner rings are preferred. The first ring groove is cut at a distance of t_1 to $1.2t_1$ from top. The lands between the rings may be equal to or less than the axial thickness of ring t_4. The gap between the free ends of the ring is taken as

$$C = (3.5 \text{ to } 4)\ t_3$$

Where t_3 is the radial thickness of ring.

PISTON BARREL:

The cylindrical portion of the piston is termed as piston barrel. The barrel thickness may be varied (usually reduced) from top side to bottom side of the piston. The maximum thickness of barrel nearer to piston head is given by, t_5 = 0.03D+b+4.5 mm

Where b= radial depth of ring-groove b= t_3+0.4mm

The thickness of barrel at the open end of the piston, t_6= (0.25 to 0.35) t_5 mm

PISTON SKIRT

The portion of the piston barrel below the ring selection up to the open end is called as portion-skirt. The piston skirt takes up the thrust of the connecting rod. The length of the piston skirt is selected in such a way that the side thrust pressure should not exceed 0.28 N/mm^2 for slow speed engines and 0.5 N/mm^2 for high speed engines.

The side thrust force is given by,

$F_s = \mu F_g$

Where μ = coefficient of friction between lines and skirt= (0.03 to 0.1)

Fg= Gas force = $\frac{\pi D2}{4}$ p_m

The side thrust pressure, p_s = $\frac{\text{side thruct force}}{\text{projected area}}$ $\frac{Fc}{L_s D}$

=

Length of skirt (Ls) = $\frac{Fc}{Pc * D}$

Where, D = Bore diameter.

LENGTH OF PISTON

The length of piston, L_p can be obtained as
$L_p = L_s$ + Length of ring section + Top land
Empirically L_p= D to 1.5D

GUDGEON PIN or PISTON PIN

The piston pin should be made of case hardened alloy steel containing nickel, chromium, molybdenum etc with ultimate strength of 700 to 900 N/mm2 in order to with stand high gas pressure. The piston pin is designed based on the bearing pressure consideration.

Let l= length of piston pin, d= diameter of piston pin, pb= Allowable bearing pressure for piston pin=15 to 30 N/mm2.

Bearing strength of piston pin F_b=Bearing pressure x Projected area

$$F_b = p_b.l.d$$

By equating this bearing strength to gas force G_g, we get

$$P_b.l.d = Fg \text{ (therefore } Fg = \frac{\pi}{4} D^2 p_m$$

Usually, l/d= 1.5 to 2
The piston pin is checked for bending as, the induced bending stress

$$\sigma_b = \frac{32M}{\pi d^3} < \sigma_b$$

where M = Bending moment = $FgD/8$

D=Bore diameter Fg= gas force

σ_b = Allowable bending stress= 84N/mm2 for case hardened steel and 140 N/mm2 for heat treated alloy steel

The gudgeon pin is fitted at a distance of (Ls/2) from open end where Ls is the skirt-length.

PISTON CLEARENCE

Proper clearance must be provided between the piston and liner to take care of thermal expansion and distortion under load. Usually the clearance may be between 0.04mm to 0.20 mm, depending upon the engine design and piston dia. small clearance may be adopted for the pistons cooled by oil(or) water.

DESIGN OF A CONNECTING ROD

The connecting rod is the intermediate member between the piston and the crankshaft. Its primary function is to transmit the push and pull from the piston pin to the crankpin and thus convert the reciprocating motion of the piston into the rotary motion of the crank. The usual form of the connecting rod in internal combustion engines is shown in Fig. 32.9. It consists of a long shank, a small end and a big end. The cross-section of the shank may be rectangular, circular, tubular, *I*-section or *H*-

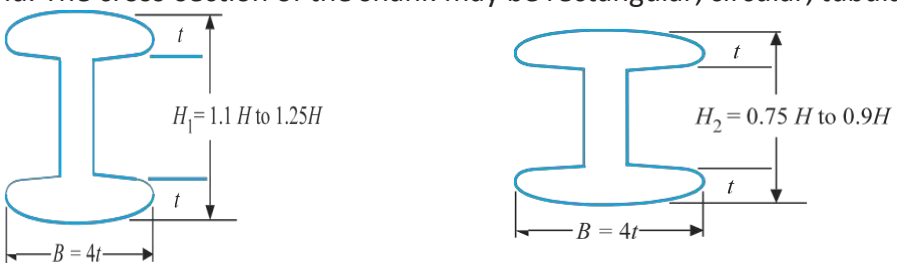

section. Generally circular section is used for low speed engines while *I*-section is preferred for high speed engines

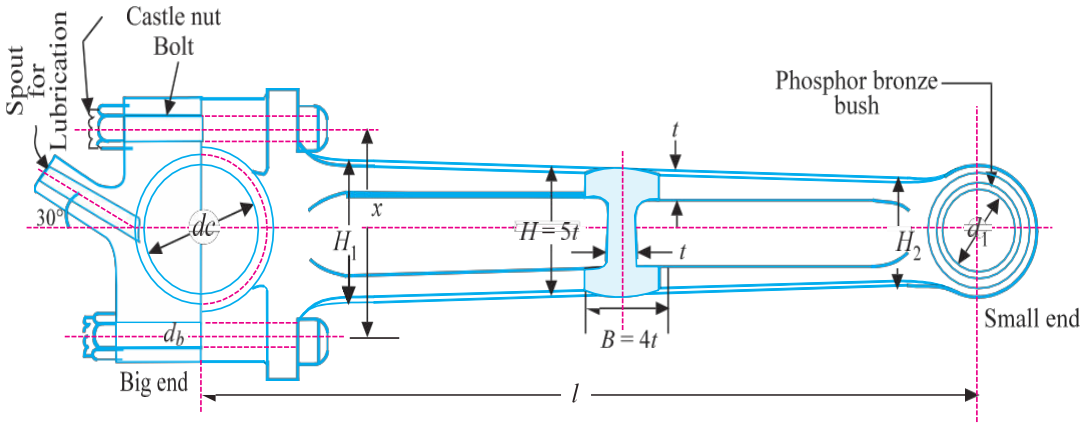

The *length of the connecting rod (*l*) depends upon the ratio of *l* / *r,* where *r* is the radius of crank. It may be noted that the smaller length will decrease the ratio *l* / *r*. This increases the angularity of the connecting rod which increases the side thrust of the piston against the cylinder liner which in turn increases the wear of the liner. The larger length of the connecting rod will increase the ratio *l* / *r*. This decreases the angularity of the connecting rod and thus decreases the side thrust and the resulting wear of the cylinder. But the larger length of the connecting rod increases the overall height of the engine. Hence, a compromise is made and the ratio *l* / *r* is generally kept as 4 to 5.

The small end of the connecting rod is usually made in the form of an eye and is provided with a bush of phosphor bronze. It is connected to the piston by means of a pistonpin.

The big end of the connecting rod is usually made split (in two **halves) so that it can be mounted easily on the crankpin bearing shells. The split cap is fastened to the big end with two cap bolts. The bearing shells of the big end are made of steel, brass or bronze with a thin lining (abou0.75 mm) of white metal or babbit metal. The wear of the big end bearing is allowed for by inserting thin metallic strips (known as ***shims***) about 0.04 mm thick between the cap and the fixed half of the connecting rod. As the wear takes place, one or more strips are removed and the bearing is trued up.

The connecting rods are usually manufactured by drop forging process and it should have adequate strength, stiffness and minimum weight. The material mostly used for connecting rods varies from mild carbon steels (having 0.35 to 0.45 percent carbon) to alloy steels (chrome-nickel or chrome-molybdenum steels). The carbon steel having 0.35 percent carbon has an ultimate tensile strength of about 650 MPa when properly heat treated and a carbon steel with 0.45 percent carbon has a ultimate tensile strength of 750 MPa. These steels are used for connecting rods of industrial engines. The alloy steels have an ultimate tensile strength of about 1050 MPa and are used for connecting rods of aero engines and automobile engines.

The bearings at the two ends of the connecting rod are either splash lubricated or pressure lubricated. The big end bearing is usually splash lubricated while the small end bearing is pressure lubricated. In the **splash lubrication system**, the cap at the big end is provided with a dipper or spout and set at an angle in such a way that when the connecting rod moves downward, the spout will dip into the lubricating oil contained in the sump. The oil is forced up the spout and then to the big end bearing. Now when the connecting rod moves upward, a splash of oil is produced by the spout. This splashed up lubricant find its way into the small end bearing through the widely chamfered holes provided on the upper surface of the small end.

In the **pressure lubricating system,** the lubricating oil is fed under pressure to the big end bearing through the holes drilled in crankshaft, crank webs and crank pin. From the big end bearing, the oil is fed to small end bearing through a fine hole drilled in the shank of the connecting rod. In some cases, the small end bearing is lubricated by the oil scrapped from the walls of the cylinder liner by the oil scraper rings.

FORCES ACTING ON THE CONNECTING ROD

The various forces acting on the connecting rod are as follows

1. Force on the piston due to gas pressure and inertia of the reciprocating parts,
2. Force due to inertia of the connecting rod or inertia bending forces,
3. Force due to friction of the piston rings and of the piston, and
4. Force due to friction of the piston pin bearing and the crankpin bearing.

We shall now derive the expressions for the forces acting on a vertical engine, as discussed below.

1. **Force on the piston due to gas pressure and inertia of reciprocating parts**

Consider a connecting rod *PC* as shown in Fig. 32.10.

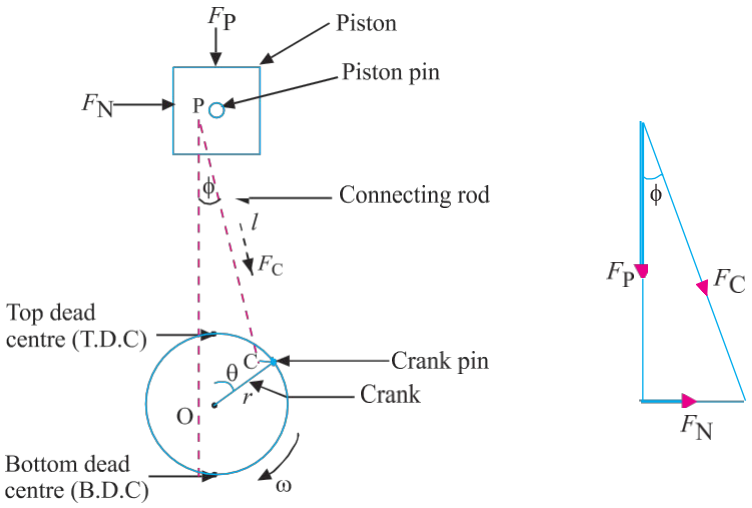

Let p = Maximum pressure ofgas,

D = Diameter of piston,

A_P = Cross-section area of piston

m_R = Mass of reciprocating parts,

r= radius of crank shaft

ω = Angular speed of crank,

ϕ= Angle of inclination of the connecting rod with the line of stroke,

Θ= Angle of inclination of the crank from top dead centre,

r = Radius of crank,

l = Length of connecting rod, and

n = Ratio of length of connecting rod to radius of crank = l / r.

Fp= Force acting on the piston= p x A_p

Fc= Force acting on the connecting rod

Fi= Inertia force due to weight of the reciprocating parts

We know that the force on the piston due to pressure of gas,

F_p = Pressure × Area = $p \,.\, A_p = p \times \pi D^2 /4$

And the inertia force of the reciprocating parts

Fi= mass x Acceleration

$$= \frac{Mr}{g} \times \omega^2 r(\cos \Theta + (\cos 2\Theta)/n)$$

The net load acting on the connecting rod, $F_C = F_P \pm F_i$

The –ve sign is used when the piston moves from TDC to BDC and +ve sign is used when the piston moves from BDC to TDC.

When weight of the reciprocating parts is to be considered, then

$$F_C = F_P \pm F_i \pm Wr$$

The actual axial load acting on the connecting rod will be more than the next load due to the angularity of the rod.

Now, the force acting on the connecting rod at any instant is given by

$$Fc = \frac{Fp - Fi}{\cos\emptyset} = \frac{Fp}{\cos\emptyset}$$

Normally inertia force due to the weight of reciprocating parts is very small, it can be neglected when designing connecting rod

$$Fc = \frac{Fp}{\cos\emptyset}$$

Since the piston is under reciprocating action, the connecting rod will be subjected to maximum force when the crank angle Θ=900 and for other positions, the force values are reduced and for Θ=00 and Θ=1800, the forces are zeros. Also the inclination of the connecting rod $\phi = \phi_{max}$ when Θ=900.Hence the maximum force acting on the connecting rod, is given by

$$Fc_{max} = \frac{Fp}{\cos\emptyset}$$

In general, n should be at least 3

Hence for n=l/r =3, $Fc=1.06F_p$

N=4, $F_c=1.03F_p$

N=5, $F_c=1.02Fp$

Maximum bending moment due to inertia force is given by the relation $M_{max}=m.\omega^2 .r.\frac{S}{9\sqrt{3}}$

Where m= mass of connecting rod

ω = Angular speed in rad/s

L= length of connecting rod

R = radius of crank

The maximum bending stress = $\frac{M_{max}}{Z}$

Where Z = section modulus.

DIMENSIONS OF CONNECTING ROD ENDS

Now the other parts of connecting rod such as its small end, big end and bolts are designed as follows

The small end is made as solid eye without any split and is provided with brass bushes inside the eye and the big end is split and the top cap is joined with the remaining parts of connecting rod by means of bolts. By this set up the connecting rod can be dismantled without removing the crank shaft. In the big end also, the brass bushes of split type are employed.

The parameters of small end and big end are determined based on the bearing pressures

Let l_1, d_1=length and diameter of piston (i.e small end respectively)

l_2, d_2 = Length and diameter of crank pin (i.e big end respectively)

pb_1, pb_2 = Design bearing pressures for the small end and big end respectively

Bearing load applied on the piston pin(i.e small end) is given by

$$\mathbf{F_1 = pb_1.l_1.d_1}$$

And the bearing load applied on the crank pin (i.e big end) is given by $\mathbf{F_2 = pb_2.l_2.d_2}$

Usually the design bearing pressure for the small end and big end may be taken as,

$$Pb_1 = 12.5 \text{ to } 15.4 \text{ N/mm}^2$$

$$Pb_2 = 10.8 \text{ to } 12.6 \text{ N/mm}^2$$

Similarly, the ratio of length to diameter for small end and big end may be assumed as,

L1/d1=1.5 to 2, l2/d2= 1.0 to 1.25

Usually, low design stress value is selected for big end than that for small end.

The biggest load to be carried by these for bearings containing piston pin and crank pin is the maximum compressive load produced by the gas pressure neglecting the inertia force due to its small value

At the same time, the bolts are designed based on the inertia force of the reciprocating parts which is given by

$$\text{Inertia force } F_i = mr\omega^2\left(\cos\theta + \frac{\cos 2\theta}{n}\right)$$

$$n = \frac{l}{r} = \frac{\text{Length of connecting rod}}{\text{crank radius}}$$

The maximum inertia force will be obtained when the crank shaft is at dead centre position, i.e ., at Θ = 0.

By equating this maximum inertia force to the tensile strength of bolts and their core diameters, the size of bolts may be determined.

For two bolts $F_{im} = 2 * \frac{\pi}{4} D^2 * S_t$

The nominal diameter may be selected from the manufacture's table (usually d_c=0.84 d_b , where d_b is the nominal dia of bolt) .

The cap is usually treated as a beam freely supported at the bolts centre's and loaded in a manner intermediate between uniformly distributed load and centrally concentrated loaded.

Maximum bending moment at the centre of cap is given by $M = wl^{l} / 6$

Where w = maximum load equal to inertia force of reciprocating parts = F_{im}

Hence $M = F_{im} l^{l}/6$

l^{l} = Distance between bolts centers

= Diameter of crank pin + (2 x wall thickness of bush) + dia of bolt + some extra marginal thickness.

Width of cap may be calculated as,

b= length of crank pin – 2 x flange thickness of bush

Usually, the wall thickness and flange thickness of bush may be taken as about 5 mm.

Bending stress induced in the cap = $S_{be} = M / Z$

Where Z = Section modulus of the cap.

$Z = 1/6 .b.t_c^2$

Where t_c = Thickness of cap.

By comparing this induced bending stress with the design stress, the thickness of cap may be evaluated.

DESIGN PROCEDURE FOR CONNECTING ROD:

For the design of connecting rod, the following steps may be observed.

1. From the statement of problem, note the pressure of steam or gas, length of connecting rod, crank radius etc,. Then select suitable material usually mild steel for the connecting rod and find its design stresses. Assume the essential non given data suitably based on the working conditions.
2. Select I-section connecting rod if possible and determine its moment of inertia about x-axis and y-axis.
3. Equate the steam force with buckling strength of connecting rod using Rankine's formula and determine the dimensions of connecting rod.
4. Calculate the maximum bending stress and then compare it with design stress of the connecting rod for checking.

SLENDERNESS RATIO:

It is the ratio of the length of column (l) to its least radius of gyration (k) Slenderness ratio =l/k

If l/k < 40 – then design of connecting rod be based on compressive load. If l/k > 40 – then design of connecting rod may be based on Buckling load.

BUCKLING LOAD or CRIPPLING LOAD

The piston rod and connecting rod are designed mainly based on compressive failure load. Since the length of rods are more, they can buckle during compression, which is also considered as functional failure. That is, the compressive load which causes buckling of piston rod or connecting rod is called as buckling load or crippling load. For proper functioning without buckling the piston rod or connecting rod should be subjected to a compressive load with is less than crippling load.

When the connecting rod or piston rod are subjected to compressive load, they may fracture when the applied compressive load is more than their resisting compressive strength. At the same time, if the length of rods have been increased beyond certain limit with respect to their gross sectional dimensions (i.e l/k > 40) the rods may buckle for lower values of compressive load known as buckling load. This buckling load also considered as functional failure. Usually design of connecting & piston rod are designed based on buckling load.

INDUSTRIAL APPLICATIONS

1. Engines in Automobile

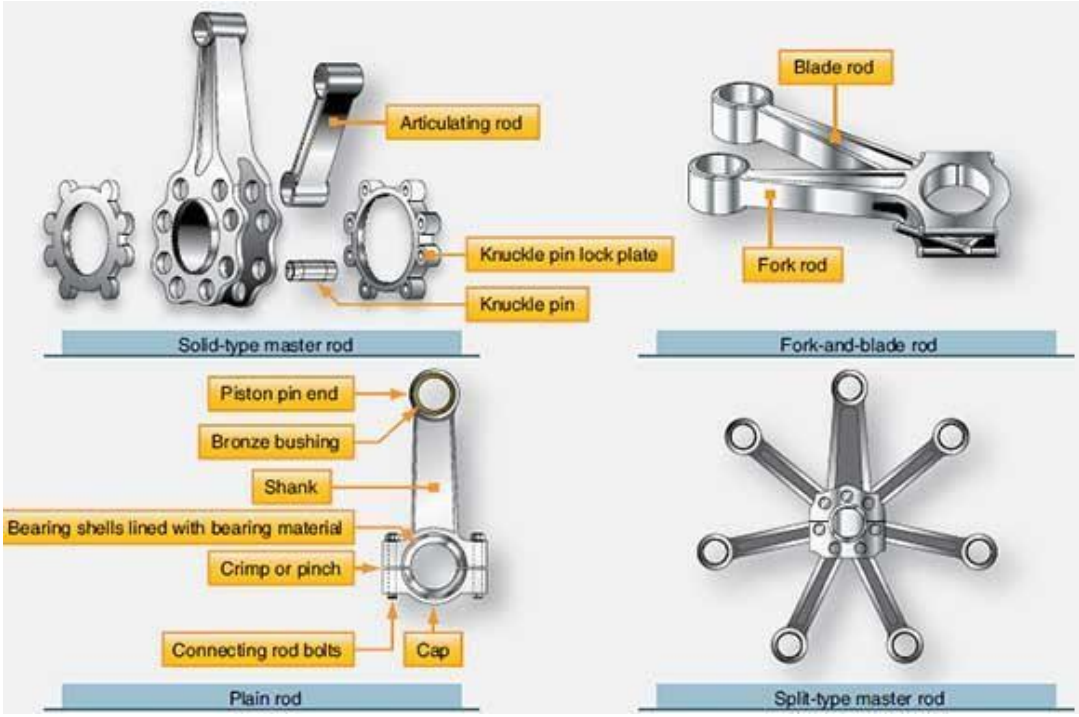

2. In boilers

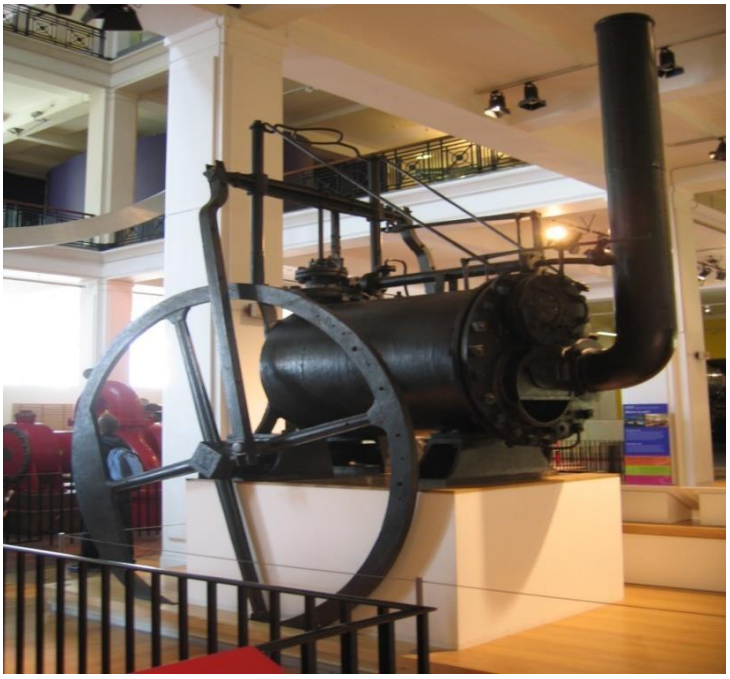

3. Marine steam boilers

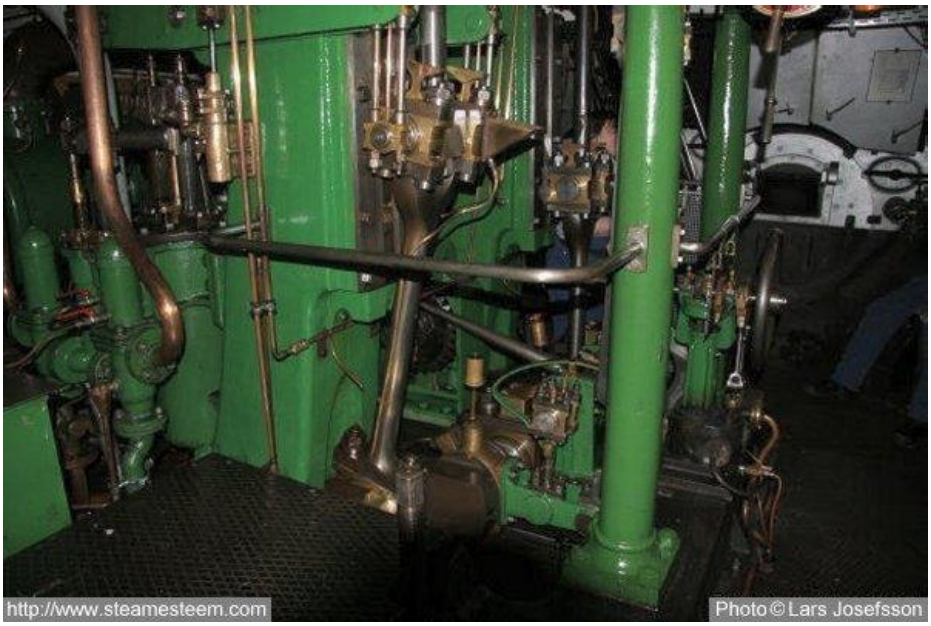

1.

TUTORIAL QUESTIONS

UNIT 2

1. Design a cast iron piston for a single acting four stroke engine for the following specifications:
   Cylinder bore =100mm, Stroke=120mm, Maximum gas pressure =5 N/mm^2
   Brake mean effective pressure=0.65 N/mm^2, Fuel consumption= 0.227 kg/KW/hr
   Speed=2200 rev/min, Assume suitable data.

2. Determine the dimensions of small and big end bearings of the connecting rod for a diesel engine with the following data:

Cylinder bore = 100 mm
Maximum gas pressure = 2.45 MPa
(l/d) ratio for piston pin bearing = 1.5 (l/d)
ratio for crank pin bearing = 1.4
Allowable bearing pressure for piston pin bearing = 15 MPa
Allowable bearing pressure for crank pin bearing = 10 MPa

3. The following data is given for the piston of a four-stroke diesel engine: Cylinder head = 250 mm

Material of piston rings = Grey cast iron
Allowable tensile stress = 100 N/mm^2
Allowable radial pressure on cylinder wall = 0.03 MPa
Thickness of piston head = 42 mm
Number of piston rings = 4

   Calculate all the dimensions related to piston and piston rings.

4. Design a connecting rod for four stroke petrol engine with the following data.
   Piston diameter = 0.10 m, stroke = 0.14 m, length of the connecting rod from centre to centre = 0.315 m, weight of reciprocating parts = 18.2 N, speed = 1500 rpm with possible over speed of 2500 compression ratio =4:1, probable maximum explosion pressure = 2.45 Mpa.

ASSIGNMENT QUESTIONS

1. Design a trunk type cast iron piston for a 4-stroke diesel engine with the following specifications: cylinder bore = 250 mm, stroke length = 375 mm, speed = 600 rpm, maximum gas pressure = 5Mpa, indicated mean effective pressure = 0.8 MPa, rate of fuel consumption = 0.3 Kg/BP/H, higher calorific value of fuel = 44 MJ/Kg, mechanical efficiency = 80 %. Sate clearly the design decision taken.
2. Design a trunk type cast iron piston for a 4-stroke diesel engine with the following specifications: cylinder bore = 250 mm , stroke length = 375 mm, speed = 600 rpm, maximum gas pressure = 5Mpa, indicated mean effective pressure = 0.8 MPa, rate of fuel consumption = 0.3 Kg/BP/H, higher calorific value of fuel = 44 MJ/Kg, mechanical efficiency = 80 %. Sate clearly the design decision taken.
3. A connecting rod is required to be designed for a high speed, four stroke I.C. engine. The following data are available. Diameter of piston = 88 mm; Mass of reciprocating parts = 1.6 kg; Length of connecting rod (centre to centre) = 300 mm; Stroke = 125 mm; R.P.M. = 2200 (when developing 50 kW); Possible over speed = 3000 r.p.m.; Compression ratio = 6.8: 1 (approximately); Probable maximum explosion pressure (assumed shortly after dead centre, say at about 3°) = 3.5 N/mm2.
4. Design a CI piston for a single acting four stroke petrol engine of the following specifications :
   Cylinder bore = 100mm
   Stroke Length =120mm
   Maximum gas pressure = 5MPa
   Break mean effective Pressure =0.65MPa
   Fuel Consumption = 0.17kg/bhp/min
   Speed =220rpm

ENGINE PARTS

UNIT 2

MRCET CAMPUS

UGC Autonomous

DEPARTMENT OF MECHANICAL ENGINEERING

BASIC PARTS OF AN ENGINE

- Cylinder block
- Piston
- Piston rings
- Piston pin
- Connecting rod
- Crankshaft
- Cylinder head
- Intake valve
- Exhaust valve
- Camshaft
- Spark plug

BASIC COMPONENTS

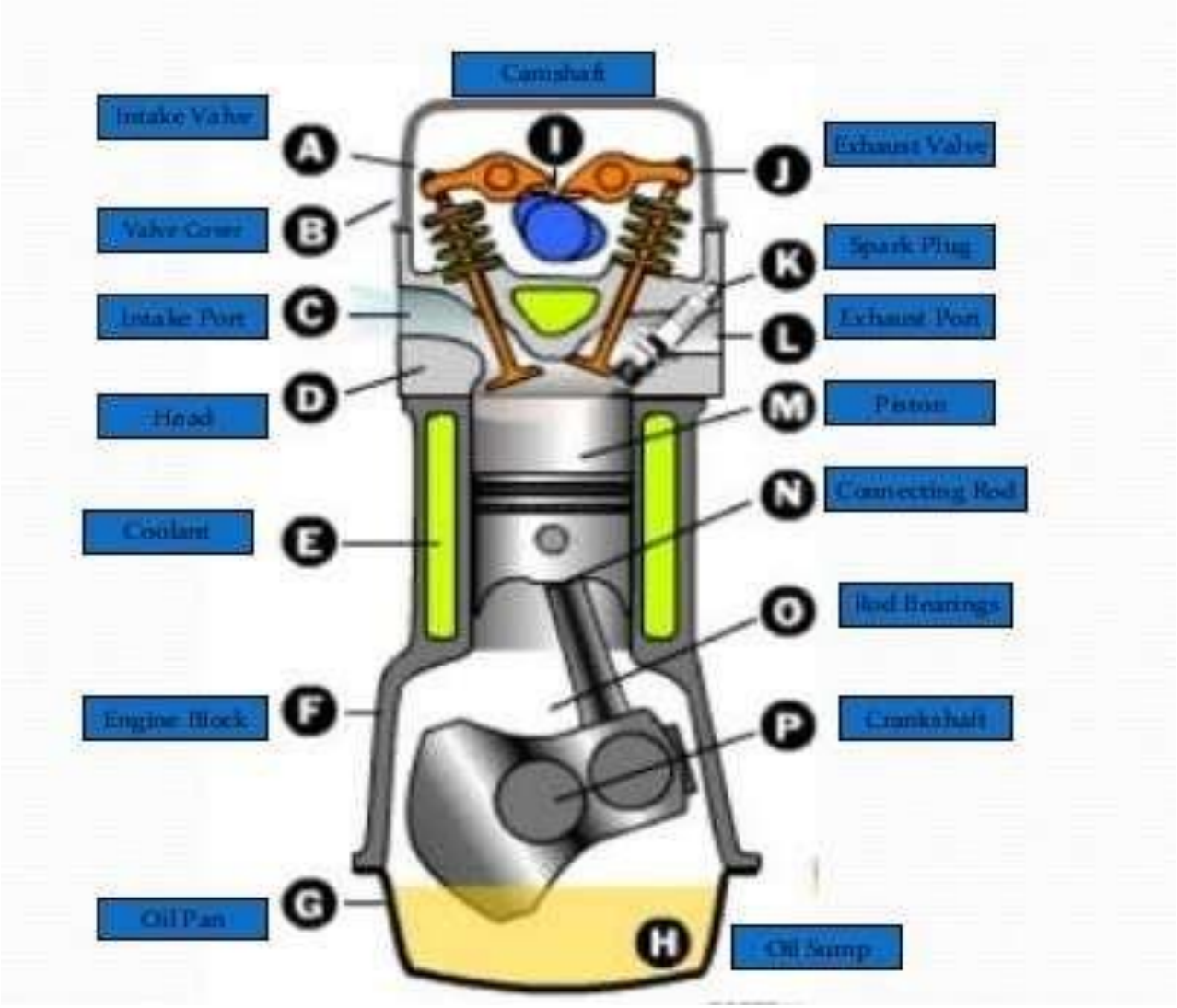

PISTON

The part of the engine that moves up and down in the cylinder converting the gasoline into motion

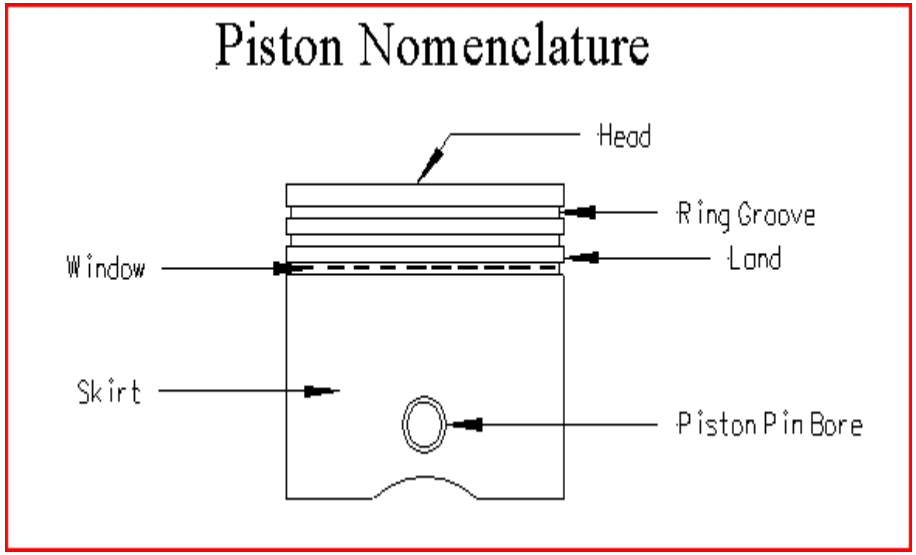

PISTON RING

- The rings seal the compression gases above the piston keep the oil below the piston rings.

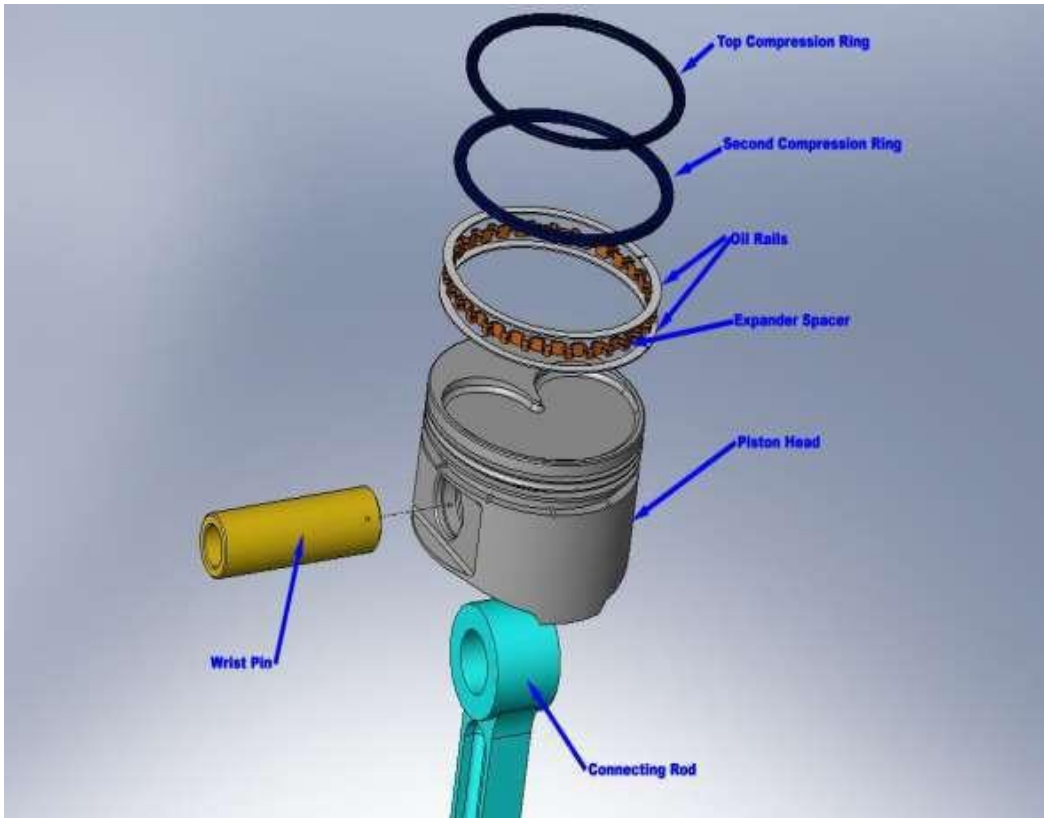

PISTON PIN

- Also known as the wrist pin, it connects the piston to the small end of the connecting rod.
- It transfers the force and allows the rod to swing back and forth.

CONNECTING ROD

Links the piston to the crankshaft.

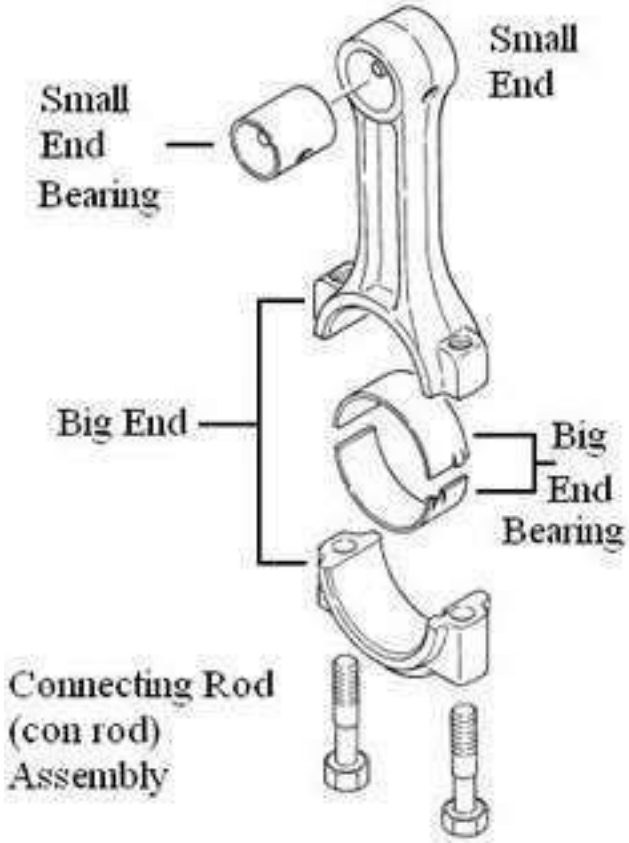

UNIT 3

MECHANICAL ENERGY STORING ELEMENTS

1. These are lighter in weight,

2. These offer silent operation,

3. These can withstand shock loads,

4. These are more reliable,

5. These are more durable,

6. They do not fail suddenly

7. The efficiency is high, and

8. The cost is low.

Classification of Wire Ropes:

1. Cross or regular lay ropes. In these types of ropes, the direction of twist of wires in the strands is opposite to the direction of twist of the stands, as shown in Fig. (a). Such type of ropes are most popular.

2. Parallel or lang lay ropes. In these type of ropes, the direction of twist of the wires in the strands is same as that of strands in the rope, as shown in Fig. (b). These ropes have better bearing surface but is harder to splice and twists more easily when loaded. These ropes are more flexible and resists wear more effectively. Since such ropes have the tendency to spin, therefore these are used in lifts and hoists with guide ways and also as haulage ropes.

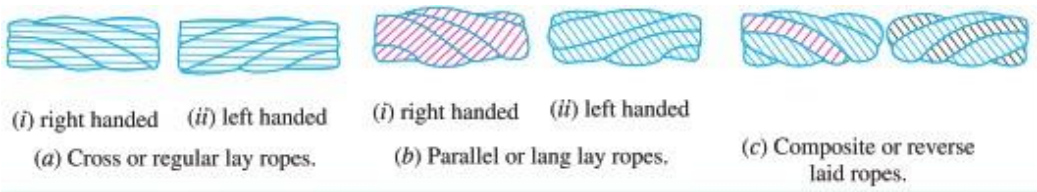

3. Composite or reverse laid ropes. In these types of ropes, the wires in the two adjacent strands are twisted in the opposite direction, as shown in Fig.

Springs

A spring is defined as an elastic bodyis to distort when loaded and to recover its original shapewhen the load is removed.

The various important applications of springs are as follows :

1. To cushion, absorb or control energy due to either shock or vibration as in car springs, railway buffers, air-craft landing gears, shock absorbers and vibration dampers.

2. To apply forces, as in brakes, clutches and springloaded valves.

3.To control motion by maintaining contact between two elements as in cams and followers.

4. To measure forces, as in spring balances and engine indicators.

5. To store energy, as in watches, toys, etc.

Types of Springs : 1. Helical springs. The helical springs are made up of a wire coiled in the form of a helix and is primarily intended for compressive or tensile loads. The cross-section of the wire from which the spring is made may be circular, square or rectangular. The two forms of helical springs are compression helical spring as shown in Fig. (a) and tension helical spring as shown in Fig.(b).

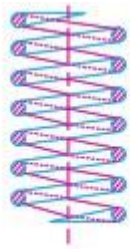

(*a*) Compression helical spring.

(*b*) Tension helical spring.

In open coiled helical springs, the spring wire is coiled in such a way that there is a gap between the two consecutive turns, as a result of which the helix angle is large. Since the application of open

coiled helical springs are limited, therefore our discussion shall confine to closely coiled helical springs only.

The helical springs have the following advantages:

(a) These are easy to manufacture.

(b) These are available in wide range.

(c) These are reliable.

(d) These have constant spring rate.

(e) Their performance can be predicted more accurately.

(f) Their characteristics can be varied by changing dimensions.

2. Conical and volute springs. The conical and volute springs, as shown in Fig., are used in special applications where a telescoping spring or a spring with a spring rate that increases with the load is desired. The conical spring, as shown in Fig.is wound with a uniform pitch whereas the volute springs, as shown in Fig. are wound in the form of paraboloid with constant pitch

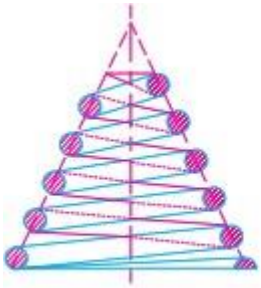

(*a*) Conical spring.

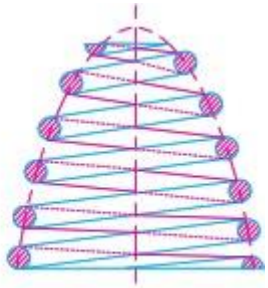

(*b*) Volute spring.

3. Torsion springs. These springs may be of helical or spiral type as shown in Fig. The helical type may be used only in applications where the load tends to wind up the spring and are used in various electrical mechanisms. The spiral type is also used where the load tends to increase the number of coils and when made of flat strip are used in watches and clocks.

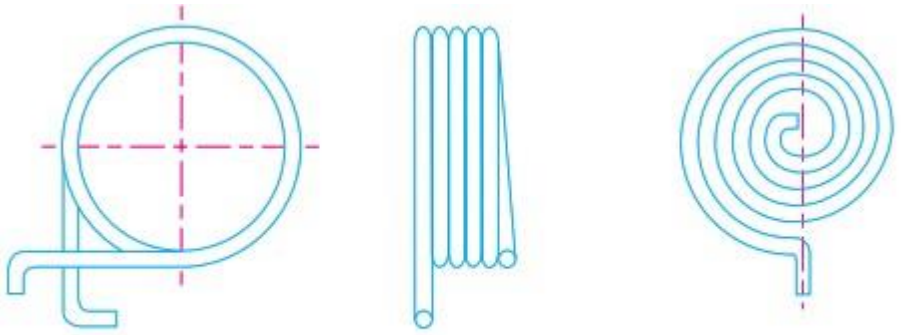

(*a*) Helical torsion spring. (*b*) Spiral torsion spring.

4. Laminated or leaf springs. The laminated or leaf spring (also known as flat spring or carriagespring) consists of a number of flat plates (known as leaves) of varying lengths held together by means of clamps and bolts, as shown in Fig. These are mostly used in automobiles.The major stresses produced in leaf springs are tensile and compressive stresses.

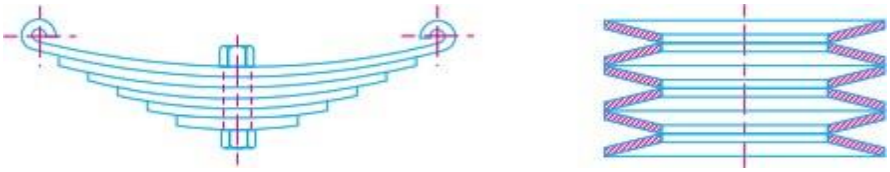

5. Disc or bellevile springs. These springs consist of a number of conical discs held together against slipping by a central bolt or tube as shown in Fig. These springs are used in applications where high spring rates and compact spring units are required. The major stresses produced in disc or bellevile springs are tensile and compressive stresses.

6. Special purpose springs. These springs are air or liquid springs, rubber springs, ring springs etc. The fluids (air or liquid) can behave as a compression spring. These springs are used for special types of application only.

Material for Helical Springs

The material of the spring should have high fatigue strength, high ductility, high resilience and it should be creep resistant. It largely depends upon the service for which they are used i.e. severe service, average service or light service.

Severe service means rapid continuous loading where the ratio of minimum to maximum load (or stress) is one-half or less, as in automotive valve springs.

Average service includes the same stress range as in severe service but with only intermittent operation, as in engine governor springs and automobile suspension springs.

Light service includes springs subjected to loads that are static or very infrequently varied, as in safety valve springs.

The springs are mostly made from oil-tempered carbon steel wires containing 0.60 to 0.70 per cent carbon and 0.60 to 1.0 per cent manganese. Music wire is used for small springs. Non-ferrousmaterials like phosphor bronze, beryllium copper, monel metal, brass etc.,

The helical springs are either cold formed or hot formed depending upon the size of the wire. Wires of small sizes (less than 10 mm diameter) are usually wound cold whereas larger size wires are wound hot. The strength of the wires varies with size, smaller size wires have greater strength and less ductility, due to the greater degree of cold working.

Terms used in Compression Springs

1. Solid length. When the compression spring is compressed until the coils come in contactwith each other, then the spring is said to be solid. The solid length of a spring is the product of total number of coils and the diameter of the wire. Mathematically,

Solid length of the spring,

$$L_S = n'*d$$

Where n' = Total number of coils, and

d = Diameter of the wire.

2. Free length: The length of the spring in the free or un loaded condition. It is equal to the solid length plus the maximum deflection or compression of the spring and the clearance between the adjacent coils (when fully compressed).

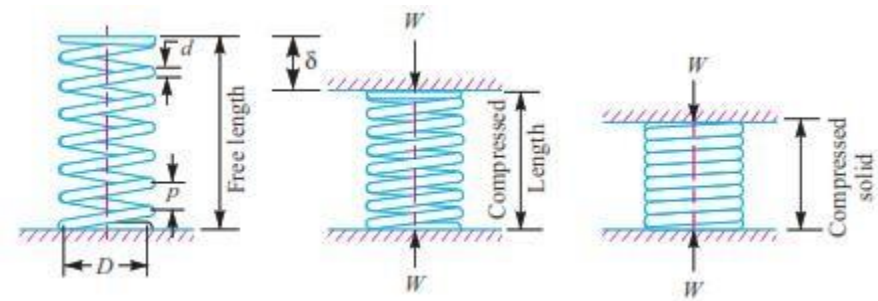

L_F= Solid length + Maximum compression + *Clearance between adjacent coils (or clash allowance)

$$= n'.d + \delta_{max} + 0.15\ \delta_{max}$$

The following relation may also be used to find the free length of the spring, i.e.

$$L_F = n'.d + \delta_{max} + (n' - 1) \times 1 \text{ mm}$$

3. Spring index. The spring index is defined as the ratio of the mean diameter of the coil to the diameter of the wire. Mathematically,

$$C = D / d$$

D = Mean diameter of the coil, and

d = Diameter of the wire.

4. Spring rate

The spring rate (or stiffness or spring constant) is defined as the load required per unit deflection of the spring. Mathematically,

Spring rate, $k = W / \delta$

Where W = Load, and

δ = Deflection of the spring.

5. Pitch. The pitch of the coil is defined as the axial distance between adjacent coils in uncompressed state. Mathematically

Pitch of the coil,

$$p = \frac{Free\ length}{n' - 1}$$

Stresses in Helical Springs of Circular Wire

D = Mean diameter of the spring coil,

d = Diameter of the spring wire,

n = Number of active coils,

G = Modulus of rigidity for the spring material,

W = Axial load on the spring,

τ = Maximum shear stress induced in the wire,

C = spring index = D/d,

p = Pitch of the coils, and

δ = Deflection of the spring, as a result of an axial load W.

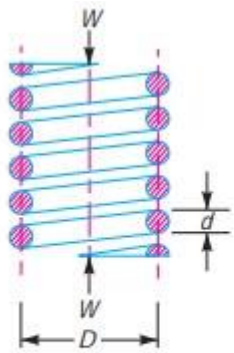

(*a*) Axially loaded helical spring.

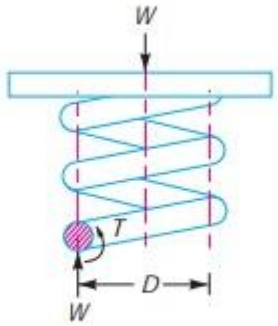

(*b*) Free body diagram showing that wire is subjected to torsional shear and a direct shear.

A little consideration will show that part of the spring, as shown in Fig. 23.10 (b), is in equilibrium

under the action of two forces W and the twisting moment T. We know that the twisting moment,

$$T = W * \frac{D}{2} = \frac{\pi}{16} \times r_1 \times d^3$$

$$r_1 = \frac{8WD}{\pi d^3}$$

The torsional shear stress diagram is shown in Fig. (a). In addition to the torsional shear stress (τ1) induced in the wire, the following stresses also act on the wire :

1. Direct shear stress due to the load W, and

2. Stress due to curvature of wire.

We know that direct shear stress due to the load W,

$$r_2 = \frac{Load}{Cross\ sectional\ area\ of\ wire}$$

$$r_2 = \frac{W}{\frac{\pi}{4} \times d^2}$$

The direct shear stress diagram is shown in Fig (b) and the resultant diagram of torsional shear stress and direct shear stress is shown in Fig. (c).

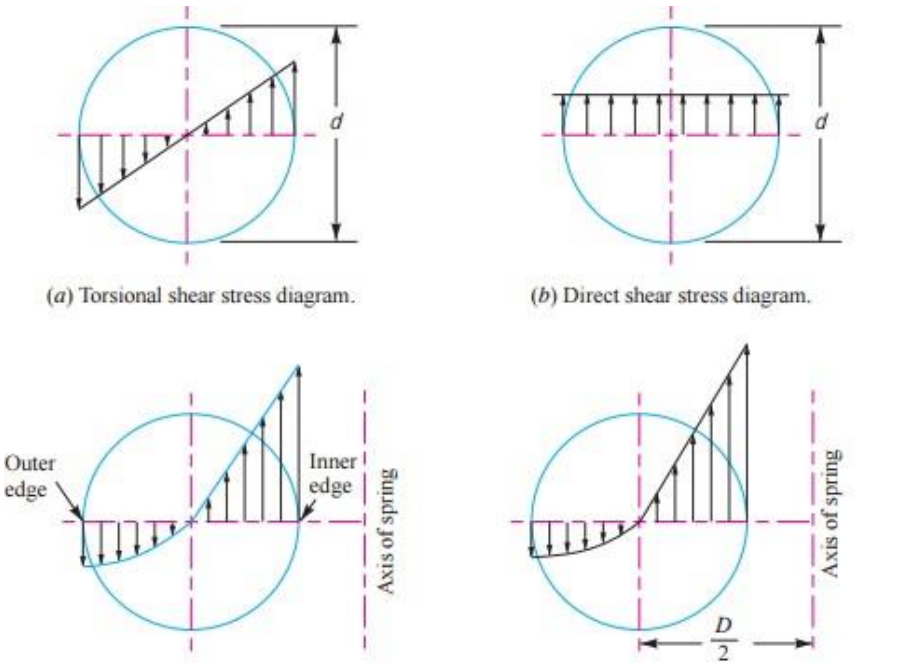

(*a*) Torsional shear stress diagram.

(*b*) Direct shear stress diagram.

(*c*) Resultant torsional shear and direct shear stress diagram.

(*d*) Resultant torsional shear, direct shear and curvature shear stress diagram.

We know that the resultant shear stress induced in the wire,

$$\tau = \tau_1 \pm \tau_2 = \frac{8W.D}{\pi d^3} \pm \frac{4W}{\pi d^2}$$

The positive sign is used for the inner edge of the wire and negative sign is used for the outer edge of the wire. Since the stress is maximum at the inner edge of the wire, therefore

Maximum shear stress induced in the wire,

= Torsional shear stress + Direct shear stress

$$= \frac{8W.D}{\pi d^3} + \frac{4W}{\pi d^2} = \frac{8W.D}{\pi d^3}\left(1 + \frac{d}{2D}\right)$$

$$= \frac{8\,W.D}{\pi d^3}\left(1 + \frac{1}{2C}\right) = K_S \times \frac{8\,W.D}{\pi d^3}$$

$$K_S = \text{Shear stress factor} = 1 + \frac{1}{2C}$$

In order to consider the effects of both direct shear as well as curvature of the wire, a Wahl's stress factor (K) introduced by A.M. Wahl may be used. The resultant diagram of torsional shear, direct shear and curvature shear stress is shown in Fig. (d).

∴ Maximum shear stress induced in the wire,

$$\tau = K \times \frac{8\,W.D}{\pi d^3} = K \times \frac{8\,W.C}{\pi d^2}$$

where $$K = \frac{4C - 1}{4C - 4} + \frac{0.615}{C}$$

The values of K for a given spring index (C) may be obtained from the graph as shown in fig

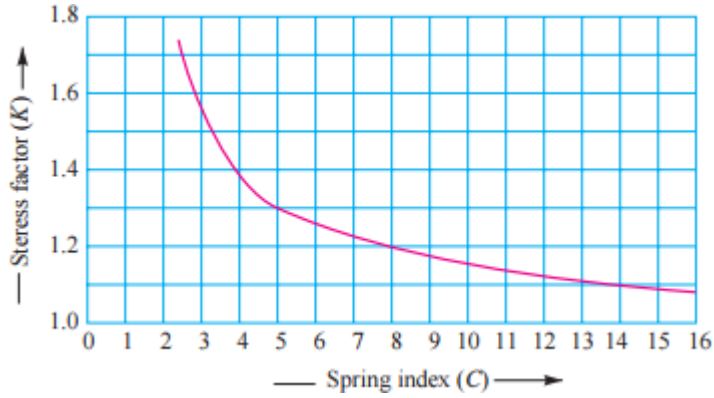

Deflection of Helical Springs of Circular Wire

$$\frac{W}{\delta} = \frac{G.d^4}{8\,D^3.n} = \frac{G.d}{8\,C^3.n} = \text{constant}$$

Eccentric Loading of springs

Sometimes, the load on the springs does not coincide with the axis of the spring, i.e. the spring is subjected to an eccentric load. In such cases, not only the safe load for the spring reduces, the stiffness of the spring is also affected. The eccentric load on the spring increases the stress on one side of the spring and decreases on the other side. When the load is offset by a distance e from the spring axis, then the safe load on the spring may be obtained by multiplying the axial load by the factor

$\frac{D}{2e+D}$, where D is the mean diameter of the spring.

Energy Stored in Helical Springs of Circular Wire:

W = Load applied on the spring, and

δ = Deflection produced in the spring due to the load W.

Assuming that the load is applied gradually, the energy stored in a spring is,

$$U = \frac{1}{2} W.\delta \qquad ...(i)$$

We have already discussed that the maximum shear stress induced in the spring wire,

$$\tau = K \times \frac{8\,W.D}{\pi\,d^3} \text{ or } W = \frac{\pi\,d^3.\tau}{8K.D}$$

We know that deflection of the spring,

$$\delta = \frac{8\,W.D^3.n}{G.d^4} = \frac{8 \times \pi\,d^3.\tau}{8K.D} \times \frac{D^3.n}{G.d^4} = \frac{\pi\,\tau.D^2.n}{K.d.G}$$

Substituting the values of W and δ in equation (*i*), we have

$$U = \frac{1}{2} \times \frac{\pi d^3 . \tau}{8 K . D} \times \frac{\pi \tau . D^2 . n}{K . d . G}$$

$$= \frac{\tau^2}{4 K^2 . G} (\pi D . n) \left(\frac{\pi}{4} \times d^2 \right) = \frac{\tau^2}{4 K^2 . G} \times V$$

where V = Volume of the spring wire

= Length of spring wire × Cross-sectional area of spring wire

$$= (\pi D . n) \left(\frac{\pi}{4} \times d^2 \right)$$

1. Find the maximum shear stress and deflection induced in a helical spring of the following specifications, if it has to absorb 1000 N-m of energy. Mean diameter of spring = 100 mm; Diameter of steel wire, used for making the spring =20 mm; Number of coils = 30; Modulus of rigidity of steel = 85 kN/mm²

Solution. Given : U = 1000 N-m ; D = 100 mm = 0.1 m ; d = 20 mm = 0.02 m ; n = 30 ; G = 85 kN/mm² = 85 × 10⁹ N/m²

Maximum shear stress induced

Let τ = Maximum shear stress induced.

We know that spring index,

$$C = \frac{D}{d} = \frac{0.1}{0.02} = 5$$

∴ Wahl's stress factor,

$$K = \frac{4C - 1}{4C - 4} + \frac{0.615}{C} = \frac{4 \times 5 - 1}{4 \times 5 - 4} + \frac{0.615}{5} = 1.31$$

Volume of spring wire,

$$V = (\pi D . n) \left(\frac{\pi}{4} \times d^2 \right) = (\pi \times 0.1 \times 30) \left[\frac{\pi}{4} (0.02)^2 \right] \text{m}^3$$

$$= 0.002\,96 \text{ m}^3$$

We know that energy absorbed in the spring (U),

$$1000 = \frac{\tau^2}{4 K^2 . G} \times V = \frac{\tau^2}{4 (1.31)^2 \, 85 \times 10^9} \times 0.00296 = \frac{5 \tau^2}{10^{15}}$$

∴ $\tau^2 = 1000 \times 10^{15} / 5 = 200 \times 10^{15}$

or $\tau = 447.2 \times 10^6$ N/m² = 447.2 MPa **Ans.**

Deflection produced in the spring

We know that deflection produced in the spring,

$$\delta = \frac{\pi \tau . D^2 n}{K . d . G} = \frac{\pi \times 447.2 \times 10^6 \, (0.1)^2 \, 30}{1.31 \times 0.02 \times 85 \times 10^9} = 0.1893 \text{ m}$$

= 189.3 mm **Ans.**

Helical Springs Subjected to Fatigue Loading

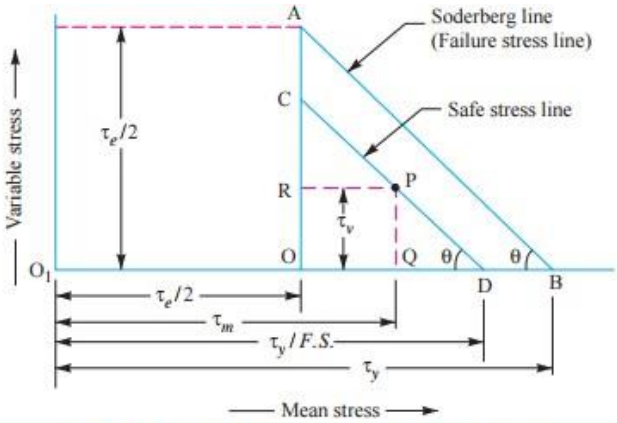

Fig. 23.19. Modified Soderberg method for helical springs.

From similar triangles PQD and AOB, we have

$$\frac{PQ}{QD} = \frac{OA}{OB} \quad \text{or} \quad \frac{PQ}{O_1D - O_1Q} = \frac{OA}{O_1B - O_1O}$$

$$\frac{\tau_v}{\frac{\tau_y}{F.S.} - \tau_m} = \frac{\tau_e/2}{\tau_y - \frac{\tau_e}{2}} = \frac{\tau_e}{2\tau_y - \tau_e}$$

or $$2\,\tau_v \cdot \tau_y - \tau_v \cdot \tau_e = \frac{\tau_e \cdot \tau_y}{F.S.} - \tau_m \cdot \tau_e$$

$$\therefore \quad \frac{\tau_e \cdot \tau_y}{F.S.} = 2\,\tau_v \cdot \tau_y - \tau_v \cdot \tau_e + \tau_m \cdot \tau_e$$

Dividing both sides by $\tau_e \cdot \tau_y$ and rearranging, we have

$$\frac{1}{F.S.} = \frac{\tau_m - \tau_v}{\tau_y} + \frac{2\tau_v}{\tau_e} \quad \text{...(i)}$$

Springs in Series

W = Load carried by the springs,

δ1 = Deflection of spring 1,

δ2 = Deflection of spring 2,

k1 = Stiffness of spring 1 = W / δ1, and

k2 = Stiffness of spring 2 = W / δ2

Total deflection of the springs,

$$\delta = \delta_1 + \delta_2$$

$$\frac{W}{k} = \frac{W}{k_1} + \frac{W}{k_2}$$

$$\frac{1}{k} = \frac{1}{k_1} + \frac{1}{k_2}$$

k = Combined stiffness of the springs.

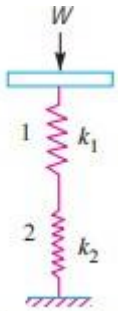

Springs in series.

Springs in Parallel

$$W = W_1 + W_2$$

$$\delta.k = \delta.k_1 + \delta.k_2$$

$$k = k_1 + k_2$$

k = Combined stiffness of the springs, and

δ = Deflection produced.

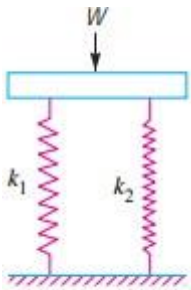

Springs in parallel.

Helical Torsion Springs

The helical torsion springs as shown in Fig. may be made from round, rectangular or square wire. These are wound in a similar manner as helical compression or tension springs but the ends are shaped to transmit torque.

A little consideration will show that the radius of curvature of the coils changes when the twisting moment is applied to the spring. Thus, the wire is under pure bending. According to A.M. Wahl, the bending stress in a helical torsion spring made of round wire is

$$\sigma_b = K \times \frac{32\,M}{\pi\,d^3} = K \times \frac{32\,W.y}{\pi\,d^3}$$

K = Wahl's stress factor = $\dfrac{4C^2 - C - 1}{4C^2 - 4C}$,

C = Spring index,

M = Bending moment = $W \times y$,

W = Load acting on the spring,

y = Distance of load from the spring axis, and

d = Diameter of spring wire.

Total Angle of Twist or Angular Deflection,

$$*\theta = \frac{M.l}{E.I} = \frac{M \times \pi D.n}{E \times \pi d^4/64} = \frac{64\ M.D.n}{E.d^4}$$

l = Length of the wire = $\pi.D.n$,

E = Young's modulus,

I = Moment of inertia = $\frac{\pi}{64} \times d^4$,

D = Diameter of the spring, and

n = Number of turns.

$$\delta = \theta \times y = \frac{64\ M.D.n}{E.d^4} \times y$$

When the spring is made of rectangular wire having width b and thickness t, then

$$\sigma_b = K \times \frac{6\ M}{t.b^2} = K \times \frac{6\ W \times y}{t.b^2}$$

where $$K = \frac{3C^2 - C - 0.8}{3C^2 - 3C}$$

Angular deflection, $\theta = \frac{12\ \pi M.D.n}{E.t.b^3}$; and $\delta = \theta.y = \frac{12\ \pi M.D.n}{E.t.b^3} \times y$

In case the spring is made of square wire with each side equal to b, then substituting $t = b$, in the above relation, we have

$$\sigma_b = K \times \frac{6\ M}{b^3} = K \times \frac{6W \times y}{b^3}$$

$$\theta = \frac{12\ \pi M.D.n}{E.b^4}; \quad \text{and} \quad \delta = \frac{12\ \pi M.D.n}{E.b^4} \times y$$

2. A helical torsion spring of mean diameter 60 mm is made of a round wire of 6 mm diameter. If a torque of 6 N-m is applied on the spring, find the bending stress induced and the angular deflection of the spring in degrees. The spring index is 10 and modulus of elasticity for the spring material is 200 kN/mm^2. The number

of effective turns may be taken as 5.5.

Solution. Given : $D = 60$ mm ; $d = 6$ mm ; $M = 6$ N-m $= 6000$ N-mm ; $C = 10$; $E = 200$ kN/mm^2 $= 200 \times 10^3$ N/mm^2 ; $n = 5.5$

Bending stress induced

We know that Wahl's stress factor for a spring made of round wire,

$$K = \frac{4C^2 - C - 1}{4C^2 - 4C} = \frac{4 \times 10^2 - 10 - 1}{4 \times 10^2 - 4 \times 10} = 1.08$$

∴ Bending stress induced,

$$\sigma_b = K \times \frac{32\,M}{\pi\,d^3} = 1.08 \times \frac{32 \times 6000}{\pi \times 6^3} = 305.5 \text{ N/mm}^2 \text{ or MPa} \quad \textbf{Ans.}$$

Angular deflection of the spring

We know that the angular deflection of the spring (in radians),

$$\theta = \frac{64\,M.D.n}{E.d^4} = \frac{64 \times 6000 \times 60 \times 5.5}{200 \times 10^3 \times 6^4} = 0.49 \text{ rad}$$

$$= 0.49 \times \frac{180}{\pi} = 28° \quad \textbf{Ans.}$$

INDUSTRIAL APPLICATIONS:

1. Belt and Rope Drives in Textile Industry

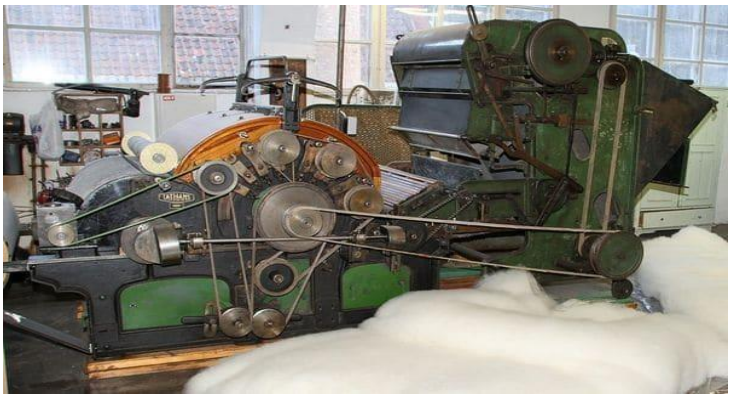

2. Agriculture

3. V belt drive are in automobiles to drive the accessories

4. Helicopter Transmission Systems – The Clutch

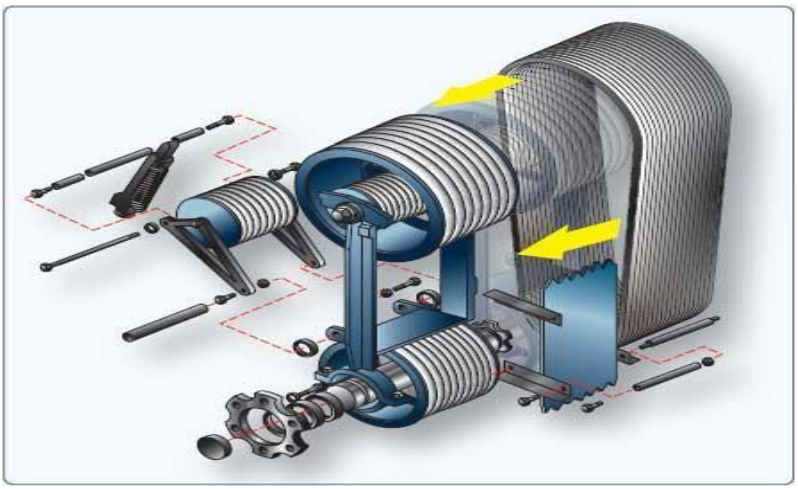

5. Lathe machine

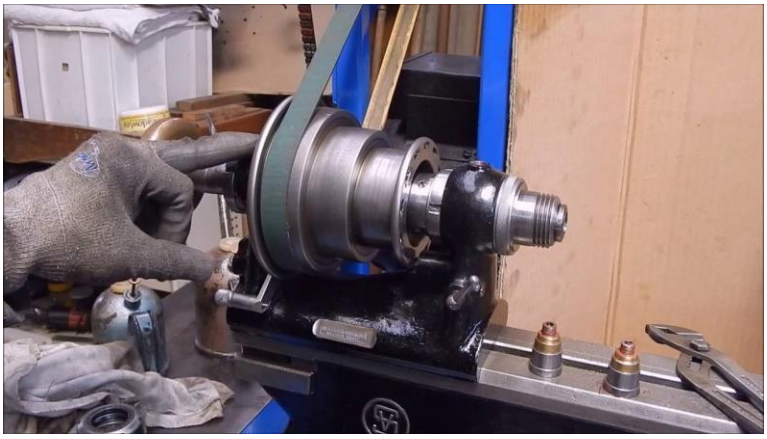

6. Railway Bogie Springs

7. **In automobile**

8. **Torsion Springs used in chassis**

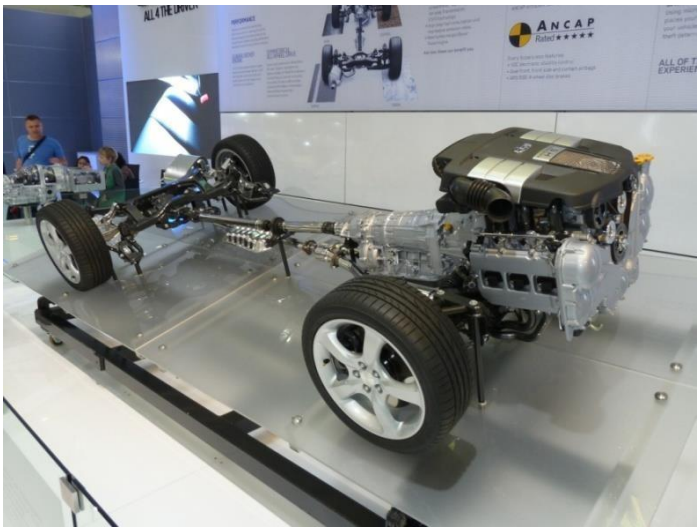

9. Medical Filed

SPRINGS

WHAT IS SPRING?

•Springs are elastic bodies (generally metal) that can be twisted, pulled, or stretched by some force. They can return to their original shape when the force is released.

•In other words it is also termed as a resilient member.

APPLICATIONS OF SPRINGS

- To apply forces and controlling motion, as in brakes and clutches.
- Measuring forces, as in the case of a spring balance.
- Storing energy, as in the case of springs used in watches and toys.
- Reducing the effect of shocks and vibrations in vehicles and machine foundations.
- To storage energy, as in watches, toys,etc

SPRINGS

TYPES OF SPRINGS

1) Open coil helical spring
2) Closed coil helical spring
3) Conical and volute spring
4) Torsion spring
5) Laminated spring
6) Disc spring
7) Special spring

SPRINGS

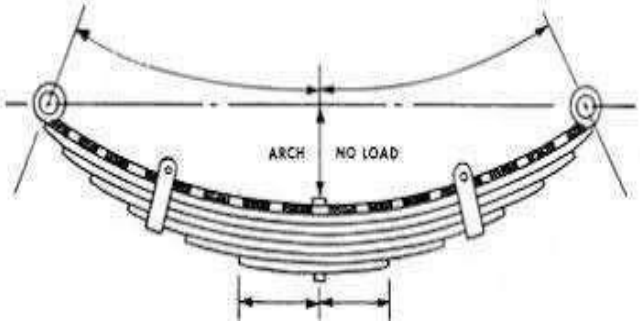
ARCH
NO LOAD


Conical & Volute Spring
Conical & Volute Springs have conical or angular shape.
Conical Spring
Volute Spring

SPRINGS

TENSION HELICAL SPRING (OR) EXTENSION SPRING

1. It has some means of transferring the load from the support to the body by means of some arrangement.
2. It stretches apart to create load.
3. The gap between the successive coils is small.
4. The wire is coiled in a sequence that the turn is at right angles to the axis of the spring.
5. The spring is loaded along the axis.
6. By applying load the spring elongates in action

SPRINGS

SPRING MATERIALS

The mainly used material for manufacturing the springs are as follows:

1) Hard drawn high carbon steel.
2) Oil tempered high carbon steel.
3) Stainless steel
4) Copper or nickel based alloys.
5) Phosphor bronze.
6) Inconel.
7) Monel
8) Titanium.
9) Chrome vanadium.
10) Chrome silicon.

SPRINGS

- **Stresses in Helical springs of circular wire**

Let D = Mean diameter of the spring coil,

d = Diameter of the spring wire,

n = Number of active coils,

G = Modulus of rigidity for the spring material,

W = Axial load on the spring,

τ = Maximum shear stress induced in the wire,

C = Spring index = D/d,

p = Pitch of the coils, and

δ = Deflection of the spring, as a result of an axial load W

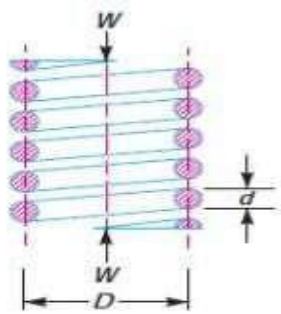

(a) Axially loaded helical spring.

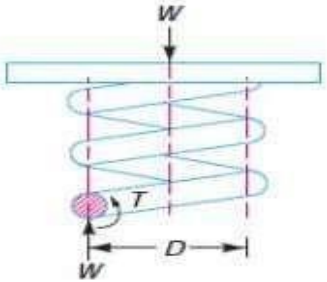

(b) Free body diagram showing that wire is subjected to torsional shear and a direct shear.

SPRINGS

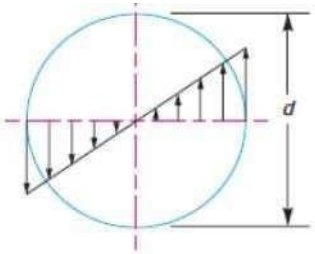

(a) Torsional shear stress diagram.

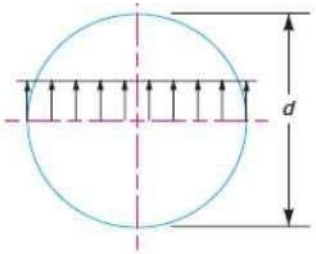

(b) Direct shear stress diagram.

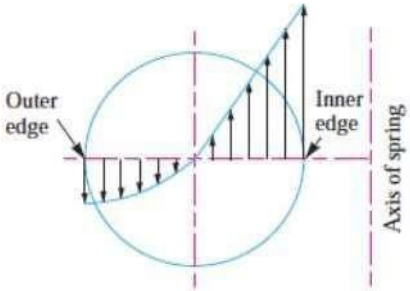

(c) Resultant torsional shear and direct shear stress diagram.

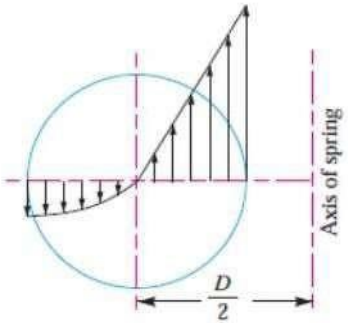

(d) Resultant torsional shear, direct shear and curvature shear stress diagram.

$$T = W \times \frac{D}{2} = \frac{\pi}{16} \times \tau_1 \times d^3$$

$$\tau_1 = \frac{8WD}{\pi d^3}$$

SPRINGS

We know that the resultant shear stress induced in the wire,

$$\tau = \tau_1 \pm \tau_2 = \frac{8W.D}{\pi d^3} \pm \frac{4W}{\pi d^2}$$

The *positive* sign is used for the inner edge of the wire and *negative* sign is used for the outer edge of the wire. Since the stress is maximum at the inner edge of the wire, therefore

Maximum shear stress induced in the wire,

= Torsional shear stress + Direct shear stress

$$= \frac{8W.D}{\pi d^3} + \frac{4W}{\pi d^2} = \frac{8W.D}{\pi d^3}\left(1 + \frac{d}{2D}\right)$$

$$= \frac{8\,W.D}{\pi d^3}\left(1 + \frac{1}{2C}\right) = K_S \times \frac{8\,W.D}{\pi d^3} \qquad \text{...(iii)}$$

... (Substituting $D/d = C$)

$$K_S = \text{Shear stress factor} = 1 + \frac{1}{2C}$$

∴ Maximum shear stress induced in the wire,

$$\tau = K \times \frac{8\,W.D}{\pi d^3} = K \times \frac{8\,W.C}{\pi d^2}$$

re

$$K = \frac{4C - 1}{4C - 4} + \frac{0.615}{C}$$

SPRINGS

WAHL'S STRESS FACTOR (K)

The Wahl's Stress Factor (K) May Be Considered As Composed Of Two Sub factors, Ks And Kc, Such That

K = Ks × Kc Where

Ks = Stress Factor Due To Shear, And

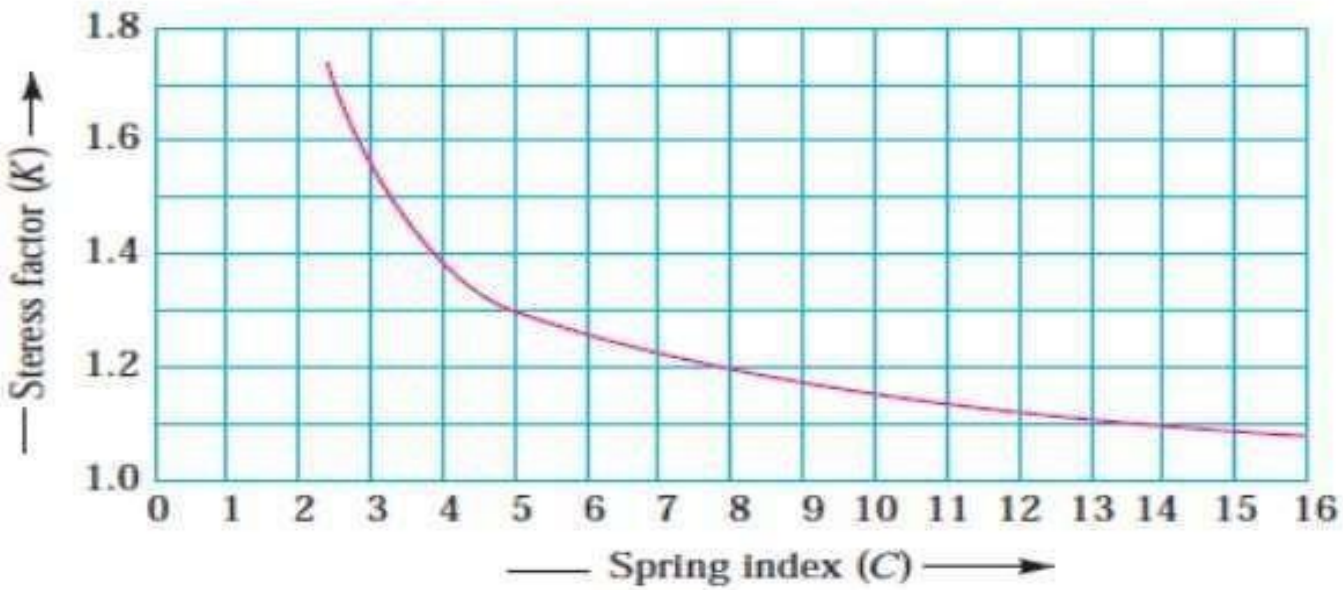

SPRINGS

KEQUIVALENT-WHEN SPRINGS ARE IN SERIES

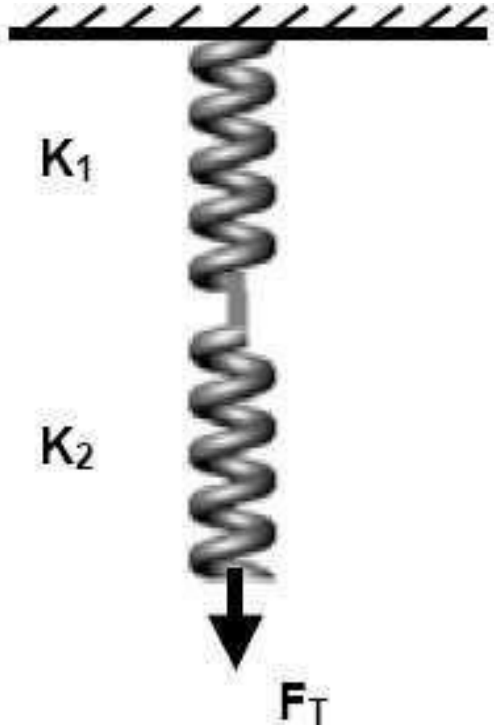

$$F_T = F_1 = F_2$$

$$\Delta_T = \Delta_1 + \Delta_2 = \frac{F_1}{K_1} + \frac{F_2}{K_2} = \frac{F_T}{K_1} + \frac{F_T}{K_2}$$

$$Keq = \frac{F_T}{\Delta_T} = \frac{F_T}{\Delta_1 + \Delta_2} = \frac{F_T}{\frac{F_T}{K_1} + \frac{F_T}{K_2}} = \frac{1}{\frac{1}{K_1} + \frac{1}{K_2}}$$

SPRINGS

K EQUIVALENT-WHEN SPRINGS ARE IN PARALLEL

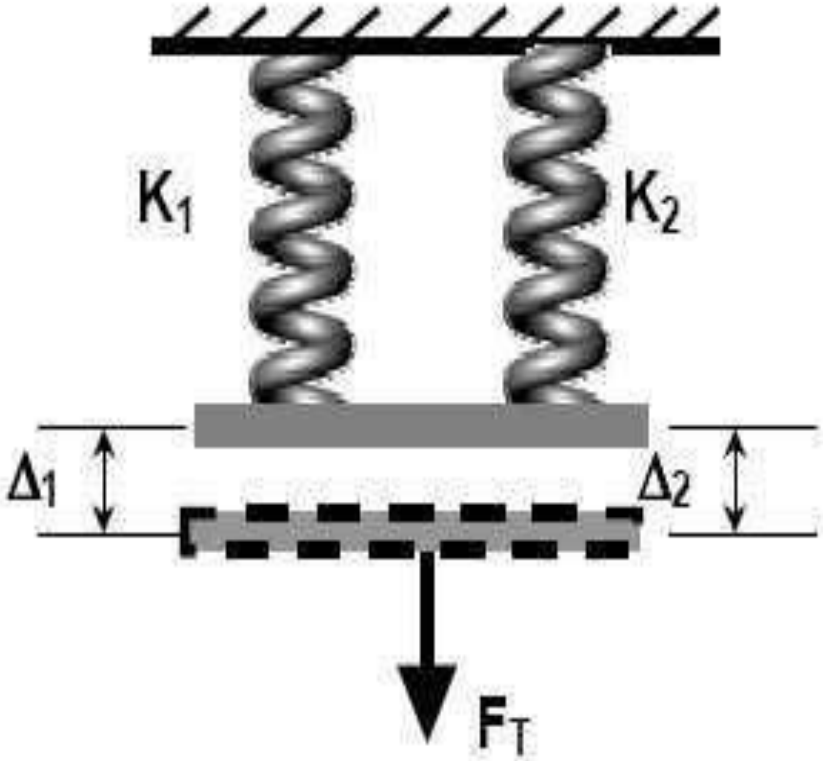

$$\Delta_T = \Delta_1 + \Delta_2$$

$$F_T = F_1 + F_2 = K_1\Delta_1 + K_2\Delta_2 = K_1\Delta_T + K_2\Delta_T$$

$$K_{eq} = \frac{F_T}{\Delta_T} = \frac{K_1\Delta_T + K_2\Delta_T}{\Delta_T} = K_1 + K_2$$

UNIT 4

SPUR AND HELICAL GEAR DRIVES

Course objectives:

To apply principles of design and Analyze the forces in mechanical power transmission elements such gears.

Course Outcomes:

Select appropriate gears for power transmission on the basis of given load and speed Design gears based on the given conditions Apply the design concepts to estimate the strength of the gear

INTRODUCTION:

Mechanical drives may be categorized into two groups;

1. Drives that transmit power by means of friction: eg: belt drives and rope drives.
2. Drives that transmit power by means of engagement: eg: chain drives and gear drives.

However, the selection of a proper mechanical drive for a given application depends upon number of factors such as centre distance, velocity ratio, shifting arrangement, Maintenance and cost.

GEAR DRIVES

Gears are defined as toothed wheels, which transmit power and motion from one shaft to another by means of successive engagement of teeth.

1. The centre distance between the shafts is relatively small.
2. It can transmit very large power
3. It is a positive, and the velocity ratio remains constant.
4. It can transmit motion at a very low velocity.

CLASSIFICATION OF GEARS:

1. Spur Gears
2. Helical gears
3. Bevel gears and
4. Worm Gears

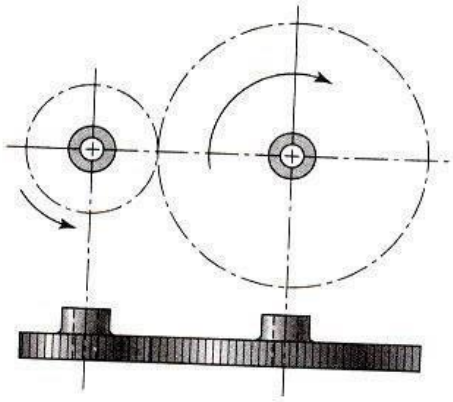

Spur Gear

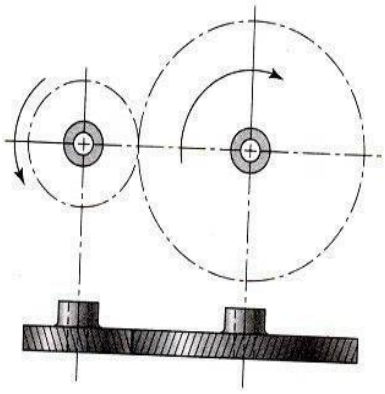

Helical Gear

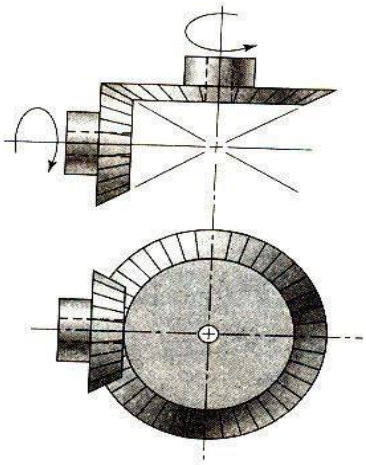

Bevel Gear

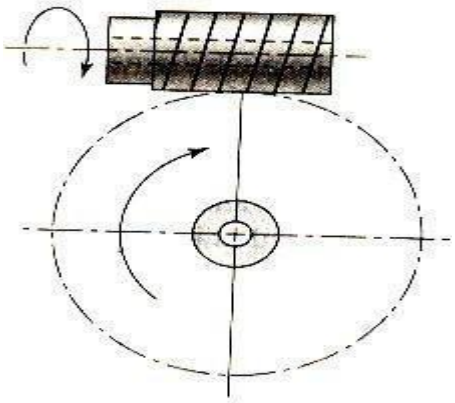

Worm Gear Set

NOMEN CLATURE

Spur gears are used to transmit rotary motion between parallel shafts. They are usually cylindrical is shape and the teeth are straight and parallel to the axis of rotation. In a pair of gears, the larger is often called the GEAR and, the smaller one is called the PINION

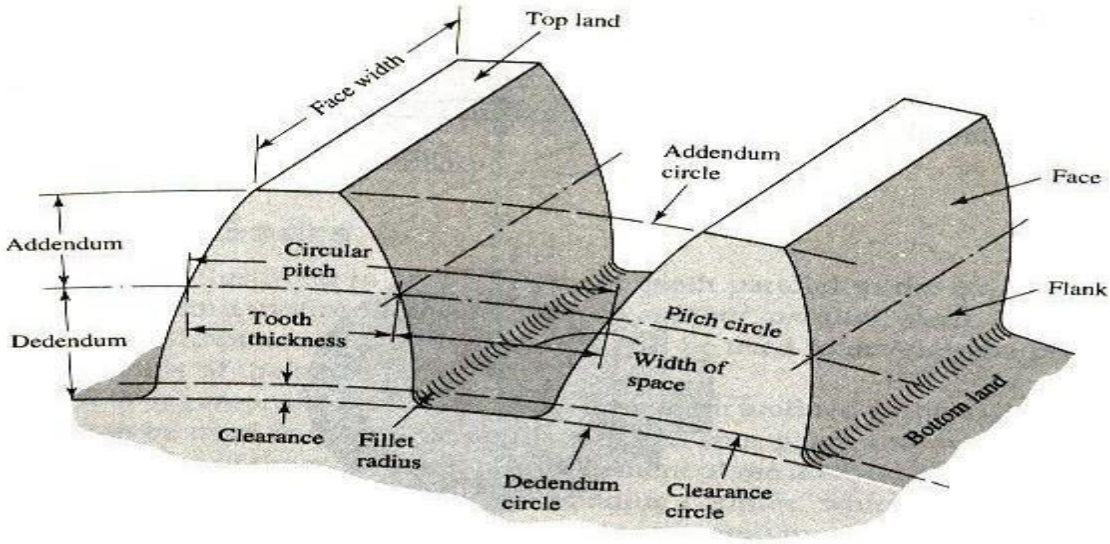

Nomenclature of Spur Gear

1. **Pitch Surface:** The pitch surfaces of the gears are imaginary planes, cylinders or cones that roll together without slipping.

2. **Pitch circle:** It is a theoretical circle upon which all calculations are usually based. It is an imaginary

circle that rolls without slipping with the pitch circle of a mating gear. Further, pitch circles of a mating gear are tangent to each other.

3. **Pitch circle diameter:** The pitch circle diameter is the diameter of pitch circle. Normally, the size of the gear is usually specified by pitch circle diameter. This is denoted by "d"

4. **Top land:** The top land is the surface of the top of the gear tooth

5. **Base circle:** The base circle is an imaginary circle from which the involute curve of the tooth profile is generated (the base circles of two mating gears are tangent to the pressure line)

6. **Addendum**: The Addendum is the radial distance between the pitch and addendum circles. Addendum indicates the height of tooth above the pitch circle.

6. **Dedendum**: The dedendum is the radial distance between pitch and the dedendum circles. Dedendum indicates the depth of the tooth below the pitch circle.

7. **Whole Depth**: The whole depth is the total depth of the tooth space that is the sum of addendum and Dedendum.

1. **Working depth:** The working depth is the depth of engagement of two gear teeth that is the sum of their addendums

2. **Clearance:** The clearance is the amount by which the Dedendum of a given gear exceeds the addendum of its mating tooth.

3. **Face:** The surface of the gear tooth between the pitch cylinder and the addendum cylinder is called face of the tooth.

4. **Flank:** The surface of the gear tooth between the pitch cylinder and the root cylinder is called flank of the tooth.

5. **Face Width:** is the width of the tooth measured parallel to the axis.

6. **Fillet radius:** The radius that connects the root circle to the profile of the tooth is called fillet radius.

7. **Circular pitch:** is the distance measured on the pitch circle, from a point on one tooth to a corresponding point on an adjacent tooth.

8. **Circular tooth thickness:** The length of the arc on pitch circle subtending a single gear tooth is called circular tooth thickness. Theoretically circular tooth thickness is half of circular pitch.

9. **Width of space:** (tooth space) The width of the space between two adjacent teeth measured along the pitch circle. Theoretically, tooth space is equal to circular tooth thickness or half of circular pitch

10. **Working depth:** The working depth is the depth of engagement of two gear teeth, that is the sum of their addendums

11. **Whole depth:** The whole depth is the total depth of the tooth space, that is the sum of addendum and dedendum and (this is also equal to whole depth + clearance)

12. **Centre distance:** it is the distance between centres of pitch circles of mating gears. (it is also equal to the distance between centres of base circles of mating gears)

13. **Line of action:** The line of action is the common tangent to the base circles of mating gears. The contact between the involute surfaces of mating teeth must be on this line to give smooth operation. The force is transmitted from the driving gear to the driven gear on this line.

14. **Pressure angle:** It is the angle that the line of action makes with the common tangent to the pitch circles.

15. **Arc of contact:** Is the arc of the pitch circle through which a tooth moves from the beginning to the end of contact with mating tooth.

16. **Arc of approach:** it is the arc of the pitch circle through which a tooth moves from its beginning of contact until the point of contact arrives at the pitch point.

17. **Arc of recess:** It is the arc of the pitch circle through witch a tooth moves from the contact at the pitch point until the contact ends.

18. **Contact Ratio? Velocity ratio:** if the ratio of angular velocity of the driving gear to the angular velocity of driven gear. It is also called the speed ratio.

19. **Module:** It is the ratio of pitch circle diameter in mith meters to the number of teeth. it is usually denoted by 'm' Mathematically

$m = D/Z$

20. **Back lash**: It is the difference between the tooth space and the tooth thickness as measured on the pitch circle.

21. **Velocity Ratio**: Is the ratio of angular velocity of the driving gear to the angular velocity of driven gear. It is also called the speed ratio.

Specification of Test Pinions and Gears

Variable	Symbol	Unit	Values of variables used in the experiments		
			Pinion		Gears
Module	m	(mm)		3.0	
Pressure angle	α_o	(deg)		20°	
Number of teeth	z	(--)	18		42
Pitch circle diameter	d	(mm)	54.0		126.0
Centre distance	a_o	(mm)		90.0	
Addendum circle diameter	d_a	(mm)	60.0		132.0
Root circle diameter	d_r	(mm)	46.5		118.5
Face width	B	(mm)	10.0		30.0

Failure Map of Involutes Gears

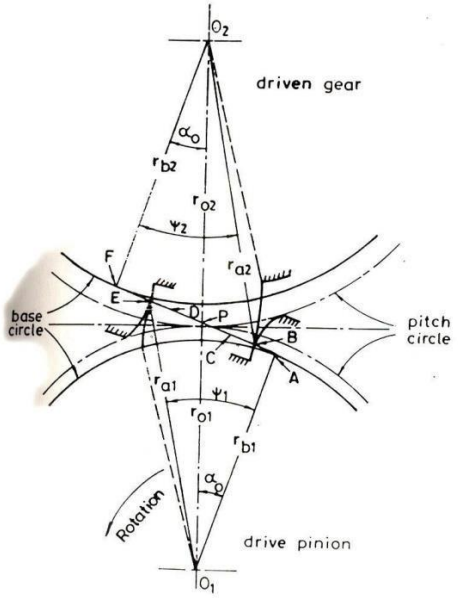

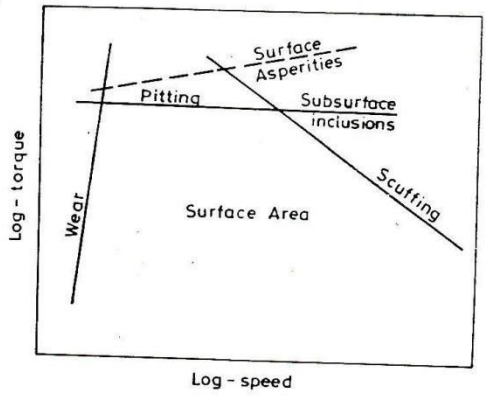

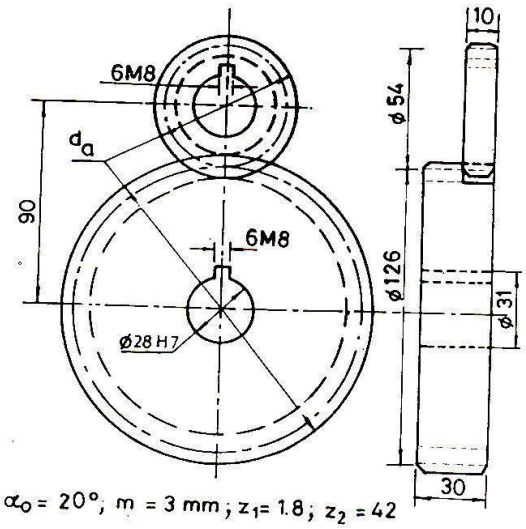

Design consideration for a Gear drive

In the design of gear drive, the following data is usually given

i. The power to be transmitted

ii. The speed of the driving gear

iii. The speed of the driven gear or velocity ratio

iv. The centre distance

The following requirements must be met in the design of a gear drive

(a) The gear teeth should have sufficient strength so that they will not fail under static loading or dynamic loading during normal running conditions

(b) The gear teeth should have wear characteristics so that their life is satisfactory.

(c) The use of space and material should be recommended The alignment of the gears and deflections of the shaft must be considered because they effect on the performance of the gears

(d) The lubrication of the gears must be satisfactory

Selection of Gears:

The first step in the design of the gear drive is selection of a proper type of gear for a given application. The factors to be considered for deciding the type of the gear are

General layout of shafts
Speed ratio
Power to be transmitted
Input speed and
Cost

Spur & Helical Gears – When the shaft are parallel

Bevel Gears – When the shafts intersect at right angles, and,

Worm & Worm Gears – When the axes of the shaft are perpendicular and not intersecting. As a special case, when the axes of the two shafts are neither intersecting nor perpendicular crossed helical gears are employed.

The speed reduction or velocity ratio for a single pair of spur or helical gears is normally taken as 6: 1. On rare occasions this can be raised to 10: 1. When the velocity ratio increases, the size of the gear wheel increases. This results in an increase in the size of the gear box and the material cost increases. For high speed reduction two stage or three stage construction are used.

The normal velocity ratio for a pair of bend gears is 1: 1 which can be increased to 3: 1 under certain circumstances.

For high-speed reduction worm gears offers the best choice. The velocity ratio in their case is 60: 1, which can be increased to 100: 1. They are widely used in materials handling equipment due to this advantage.

Further, spur gears generate noise in high-speed applications due to sudden contact over the entire face with between two meeting teeth. Whereas, in helical gears the contact between the two meshing teeth begins with a point and gradually extends along the tooth, resulting in guide operations.

From considerations spur gears are the cheapest. They are not only easy to manufacture but there exists a number of methods to manufacture them. The manufacturing of helical, bevel and worm gears is a specialized and costly operation.

Low of Gearing: The fundamental law of gearing states "The common normal to the both profile at the point of contact should always pass through a fixed point called the pitch point, in order to obtain a constant velocity ratio.

MODULE: The module specifies the size of gear tooth. Figure shows the actual sizes of gear tooth with four different modules. It is observed that as the modules increases, the size of the gear tooth also increases. It can be said that module is the index of the size of gear tooth.

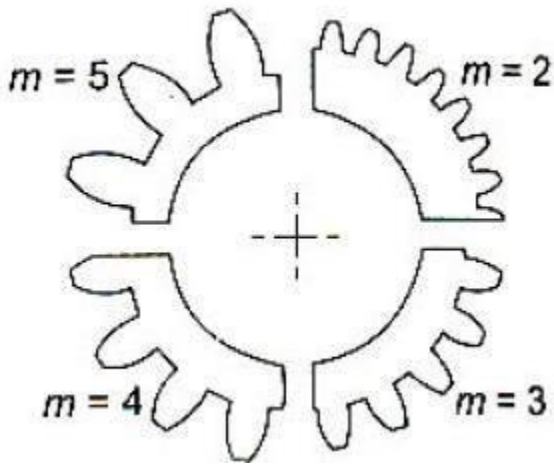

Standard values of module are as shown.

Recommended Series of Modules (mm)

Preferred (1)	Choice 2 (2)	Choice 3 (3)	Preferred (1)	Choice 2 (2)	Choice 3 (3)
1			8	7	(6.5)
1.25	1.125		10	9	
1.5	1.375		12	11	
2	1.75		16	14	
2.5	2.25		20	18	
3	2.75	(3.25)	25	22	
4	3.5		32	28	
5	4.5	(3.75)	40	36	
6	5.5		50	45	

Note: The modules given in the above table apply to spur and helical gears. In case of helical gears and double helical gears, the modules represent normal modules

The module given under choice 1, is always preferred. If that is not possible under certain circumstances module under choice 2, can be selected.

Standard proportions of gear tooth in terms of module m, for 20° full depth system.

Addendum = m

Dedendum = 1.25 m

Cl earance (c) = 0.25 m

Working depth = 2 m

Whole depth = 2.25 m

Tooth thickness = 1.5708 m=1.5708 m

Tooth space = 1.5708 m

Fillet radius = 0.4 m

Standard Tooth proportions of involutes spur gear

Gear Terms	Circular pitch p	Diametral pitch P	Module m
Addendum	0.3183 p	1/P	m
Dedendum	0.3977 p	1.25/P	1.25 m
Tooth thickness	0.5 p	1.5708/P	1.5708 m
Tooth space	0.5 p	1.5708/P	1.5708 m
Working depth	0.6366 p	2/P	2 m
Whole depth	0.7160 p	2.25/P	2.25 m
Clearance	0.0794 p	0.25/P	0.25 m
Pitch diameter	zp/π	z/P	zm
Outside diameter	(z+2)p/π	(z+2)/P	(z+2) m
Root diameter	(z - 2.5)p/π	(z – 2.5)/P	(z – 2.5) m
Fillet radius	0.1273p	0.4/P	0.4 m

Selection of Material:

- The load carrying capacity of the gear tooth depends upon the ultimate tensile strength or yield strength of the material.
- When the gear tooth is subjected to fluctuating forces, the endurance strength of the tooth is the

deciding Factor.

- The gear material should have sufficient strength to resist failure due to breakage of tte tooth.
- In many cases, it is wear rating rather than strength rating which decides the dimensions of gear
- tooth.
- The resistance to wear depends upon alloying elements, grain size, percentage of carbon and surface hardness.
- The gear material should have sufficient surface endurance strength to avoid failure due to destructive pitting.
- For high-speed power transmission, the sliding velocities are very high and the material should have a low co-efficient of friction to avoid failure due to scoring.
- The amount of thermal distortion or wrapping during the heat treatment process is a major problem on gear application.
- Due to wrapping the load gets concentrated at one corner of the gear tooth.
- Alloy steels are superior to plain carbon steel in this respect (Thermal distortion)

Load-Distribution Factor Km (KH)

The load-distribution factor modified the stress equations to reflect non uniform distribution of load across the line of contact. The idea is to locate the gear "mid span" between two bearings at the zero slope places when the load is applied. However, this is not always possible. The following procedure is applicable to

- Net face width to pinion pitch diameter ratio $F/d \leq 2$
- Gear elements mounted between the bearings
- Face widths up to 40 in
- Contact, when loaded, across the full width of the narrowest member

The load-distribution factor under these conditions is currently given by the *face load* distribution factor, C_{mf} , where

$$K_m = C_{mf} = 1 + C_{mc}\,(C_{pf}\,C_{pm} + C_{ma}C_e)$$

$$C_{mc} = \begin{cases} 1 & \text{for uncrowned teeth} \\ 0.8 & \text{for crowned teeth} \end{cases}$$

$$C_{pf} = \begin{cases} \dfrac{F}{10d} - 0.025 & F \le 1 \text{ in} \\ \dfrac{F}{10d} - 0.0375 + 0.0125F & 1 < F \le 17 \text{ in} \\ \dfrac{F}{10d} - 0.1109 + 0.0207F - 0.000\,228F^2 & 17 < F \le 40 \text{ in} \end{cases}$$

Note that for values of $F/(10d) < 0.05$, $F/(10d) = 0.05$ is used.

$$C_{pm} = \begin{cases} 1 & \text{for straddle-mounted pinion with } S_1/S < 0.175 \\ 1.1 & \text{for straddle-mounted pinion with } S_1/S \ge 0.175 \end{cases}$$

$$C_{ma} = A + BF + CF^2 \qquad \text{(see Table 14–9 for values of } A, B, \text{ and } C)$$

$$C_e = \begin{cases} 0.8 & \text{for gearing adjusted at assembly, or compatibility is improved by lapping, or both} \\ 1 & \text{for all other conditions} \end{cases}$$

Force analysis – Spur gearing:

We know that, the reaction between the mating teeth occur along the pressure line, and the power is transmitted by means of a force exerted by the tooth of the driving gear on the meshing tooth of the driven gear. (i.e. driving pinion exerting force PN on the tooth of driven gear).

According to fundamental law of gear this resultant force PN always acts along the pressure line.

This resultant force P_N, can be resolved into two components – tangential component Pt and radial components Pr at the pitch point.

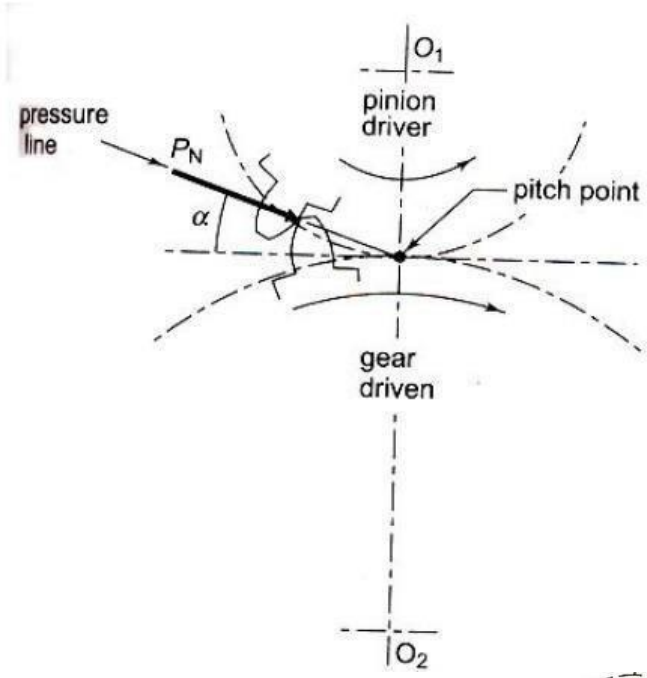

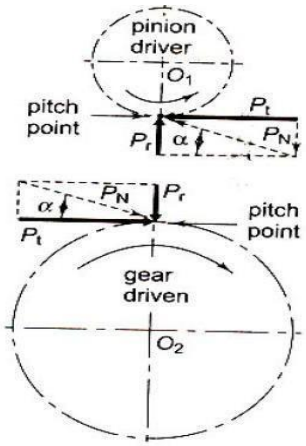

The tangential component Pt is a useful component (load) because it determines the magnitude of the torque and consequently the power, which is transmitted.

The radial component Pr services no useful purpose (it is a separating force) and it is always directed towards the centre of the gear.

The torque transmitted by the gear is given by

$$M_t = \frac{P \times 60}{2\pi N_1} \; N-m$$

Mt = Torque transmitted gears (N- m) PKW = Power

transmitted by gears N1 = Speed of rotation (rev / mn)

The tangential component Ft acts at the pitch circle radius.

$$\therefore \quad M_t = F_t \frac{d}{2}$$

OR

$$F_t = \frac{2M_t}{d}$$

Where,

Mt = Torque transmitted gears N- mm d = Pitch

Circle diameter, mm

Further, we know,

Power transmitted by gears = 2 πN M_t /60 (KW)

Where $F_r = F_t \tan\alpha$

Resultant force,

$$FN = \frac{F_t}{Cos\alpha}$$

The above analysis of gear tooth force is based on the following assumptions.

i) As the point of contact moves the magnitude of resultant force PN changes. This effect is neglected.

ii) It is assumed that only one pair of teeth takes the entire load. At times, there are two pairs that are simultaneously in contact and share the load. This aspects is also neglected.

iii) This analysis is valid under static conditions for example, when the gears are running at very low velocities. In practice there are dynamic forces in addition to force due to power transmission.

For gear tooth forces, It is always required to find out the magnitude and direction of two components. The magnitudes are determined by using equations

$$M_t = \frac{P \times 60}{2\pi N_1}$$

$$F_t = \frac{2M_t}{d_1}$$

Further, the direction of two components Ft and Fr are decided by constructing the free body diagram. The minimum number of teeth on pinion to avoid interference is given by

$$Z_{\min} = \frac{2}{\sin^2 \alpha}$$

For 20°full depth involutes system, it is always safe to assume the number of teeth as 18 or 20 Once the number of teeth on the pinion is decided, the number of teeth on the gear is calculated by the velocity ratio

Face Width:

$$i = \frac{Z_2}{Z_1}$$

In designing gears, it is required to express the face width in terms of module.

In practice, the optimum range of face width is 9.5 m ≤ b ≤ 12.5m

Generally, face width is assumed as ten times module

$$\therefore \quad \boxed{b = 12.5m}$$

Systems of Gear Teeth

The following four systems of gear teeth are commonly used in practice.

1. $14^1/2°$ Composite system, **2.** $14^1/2°$ Full depth involute system, **3.** 20° Full depth involute system,

and **4.** 20° Stub involute system.

The 14 /2° ***composite system*** is used for general purpose gears. It is stronger but has no

Interchangeability. The tooth profile of this system has cycloidal curves at the top and bottom and involute

curve at the middle portion. The teeth are produced by formed milling cutters or hobs. The tooth profile of the 14^1 /2° ***full depth involute system*** was developed for use with gear hobs for spur and helical gears.

The tooth profile of the **20° *full depth involute system*** may be cut by hobs. The increase of the pressure angle from 14^1/2° to 20° results in a stronger tooth, because the tooth acting as a beam is wider at the base. The **20° *stub involute system*** has a strong tooth to take heavy loads.

Standard Proportions of Gear Systems

The following table shows the standard proportions in module (*m*) for the four gear systems as discussed in the previous article.

Table Standard proportions of gear systems.

S. No.	*Particulars*	*$14^1/_2$° composite or full depth involute system*	*20° full depth involute system*	*20° stub involute system*
1.	Addendum	1*m*	1*m*	0.8 *m*
2.	Dedendum	1.25 *m*	1.25 *m*	1 *m*
3.	Working depth	2 *m*	2 *m*	1.60 *m*
4.	Minimum total depth	2.25 *m*	2.25 *m*	1.80 *m*
5.	Tooth thickness	1.5708 *m*	1.5708 *m*	1.5708 *m*
6.	Minimum clearance	0.25 *m*	0.25 *m*	0.2 *m*
7.	Fillet radius at root	0.4 *m*	0.4 *m*	0.4 *m*

Causes of Gear Tooth Failure

The different modes of failure of gear teeth and their possible remedies to avoid the failure are as follows:

1. ***Bending failure*.** Every gear tooth acts as a cantilever. If the total repetitive dynamic load acting on the gear tooth is greater than the beam strength of the gear tooth, then the gear tooth will fail in bending, *i.e*. the gear tooth will break.

In order to avoid such failure, the module and face width of the gear is adjusted so that the beam strength is greater than the dynamic load.

2. ***Pitting.*** It is the surface fatigue failure which occurs due to much repetition of Hertz contact stresses. The failure occurs when the surface contact stresses are higher than the endurance limit of the material. The failure starts with the formation of pits which continue to grow resulting in the rupture of the tooth surface.

In order to avoid the pitting, the dynamic load between the gear tooth should be less than the wear strength of the gear tooth.

3. ***Scoring.*** The excessive heat is generated when there is an excessive surface pressure, high speed or supply of lubricant fails. It is a stick-slip phenomenon in which alternate shearing and weldingtakes place rapidly at high spots.

This type of failure can be avoided by properly designing the parameters such as speed, pressure and proper flow of the lubricant, so that the temperature at the rubbing faces is within the permissible limits.

4. ***Abrasive wear.*** The foreign particles in the lubricants such as dirt, dust or burr enter between the tooth and damage the form of tooth. This type of failure can be avoided by providing filters for the lubricating oil or by using high viscosity lubricant oil which enables the formation of thicker oil film and hence permits easy passage of such particles without damaging the gear surface.

5. ***Corrosive wear.*** The corrosion of the tooth surfaces is mainly caused due to the presence of corrosive elements such as additives present in the lubricating oils. In order to avoid this type of wear, proper anti-corrosive additives should be used.

Design Procedure for Spur Gears

1. First of all, the design tangential tooth load is obtained from the power transmitted and the pitch line velocity by using the following relation :

$$W_T = \frac{P}{v} \times C_S \qquad ...(i)$$

where W_T = Permissible tangential tooth load in newtons,

P = Power transmitted in watts,

*v = Pitch line velocity in m / s $= \frac{\pi D N}{60}$,

D = Pitch circle diameter in metres,

---

* We know that circular pitch,

$$p_c = \pi D / T = \pi m \qquad ...(\because m = D / T)$$

$$\therefore \quad D = m.T$$

Thus, the pitch line velocity may also be obtained by using the following relation, *i.e.*

$$v = \frac{\pi D.N}{60} = \frac{\pi m.T.N}{60} = \frac{p_c.T.N}{60}$$

where m = Module in metres, and

T = Number of teeth.

N = Speed in r.p.m., and

CS = Service factor.

The following table shows the values of service factor for different types of loads:

Table Values of service factor.

Type of load	*Type of service*		
	Intermittent or 3 hours per day	*8-10 hours per day*	*Continuous 24 hours per day*
Steady	0.8	1.00	1.25
Light shock	1.00	1.25	1.54
Medium shock	1.25	1.54	1.80
Heavy shock	1.54	1.80	2.00

Note : The above values for service factor are for enclosed well lubricated gears. In case of non- enclosed and grease lubricated gears, the values given in the above table should be divided by 0.65.

2. Apply the Lewis equation as follows :

$$W_T = \sigma_w . b . p_c . y = \sigma_w . b . \pi\, m . y$$

$$= (\sigma_o . C_v)\, b . \pi\, m . y \qquad \ldots(\because \sigma_w = \sigma_o . C_v)$$

Notes : (*i*) The Lewis equation is applied only to the weaker of the two wheels (*i.e*. pinion or gear).

(ii) When both the pinion and the gear are made of the same material, then pinion is the weaker.

(iii) When the pinion and the gear are made of different materials, then the product of ($\sigma_w \times y$) or ($\sigma_o \times y$) is the *deciding factor. The Lewis equation is used to that wheel for which ($\sigma_w \times y$) or ($\sigma_o \times y$) is less.

* We see from the Lewis equation that for a pair of mating gears, the quantities like *W*T, *b*, *m*

and *Cv* are constant. Therefore ($\sigma_w \times y$) or ($\sigma_o \times y$) is the only deciding factor.

(iv) The product ($\sigma_w \times y$) is called ***strength factor*** of the gear.

(v) The face width (*b*) may be taken as 3 *pc* to 4 *pc* (or 9.5 *m* to 12.5 *m*) for cut teeth and 2 *pc* to 3 *pc* (or 6.5 *m* to 9.5 *m*) for cast teeth.

Calculate the dynamic load (*W*D) on the tooth by using Buckingham equation, *i.e*

$$W_D = W_T + W_I$$

$$= W_T + \frac{21v\,(b.C + W_T)}{21v + \sqrt{b.C + W_T}}$$

In calculating the dynamic load (*W*D), the value of tangential load (*W*T) may be calculated by neglecting the service factor (*C*S) *i.e*.

*W*T = *P* / *v*, where *P* is in watts and *v* in m / s.

Find the static tooth load (*i.e*. beam strength or the endurance strength of the tooth) by using the relation,

$W_S = \sigma_e.b.pc.y = \sigma_e.b.\pi\, m.y$

For safety against breakage, W_S should be greater than W_D.

3. Finally, find the wear tooth load by using the relation,

$W_w = D_P.b.Q.K$

The wear load *(Ww)* should not be less than the dynamic load (W_D).

1. The nearest standard module if no interference is to occur;
2. The number of teeth on each wheel;
3. The necessary width of the pinion; and
4. The load on the bearings of the wheels due to power transmitted.

Spur Gear Construction

The gear construction may have different designs depending upon the size and its application. When the dedendum circle diameter is slightly greater than the shaft diameter, then the pinion teeth are cut integral with the shaft as shown in Fig. 28.13 (*a*). If the pitch circle diameter of the pinion is less than or equal to 14.75 *m* + 60 mm (where *m* is the module in mm), then the pinion is made solid with uniform thickness equal to the face width, as shown in Fig. 28.13 (*b*). Small gears upto 250 mm pitch circle diameter are built with a web, which joins the hub and the rim. The web thickness is generally equal to half the circular pitch or it may be taken as 1.6 *m* to 1.9 *m*, where *m* is the module. The web may be made solid as shown in Fig. 28.13 (*c*) or may have recesses in order to reduce its weight.

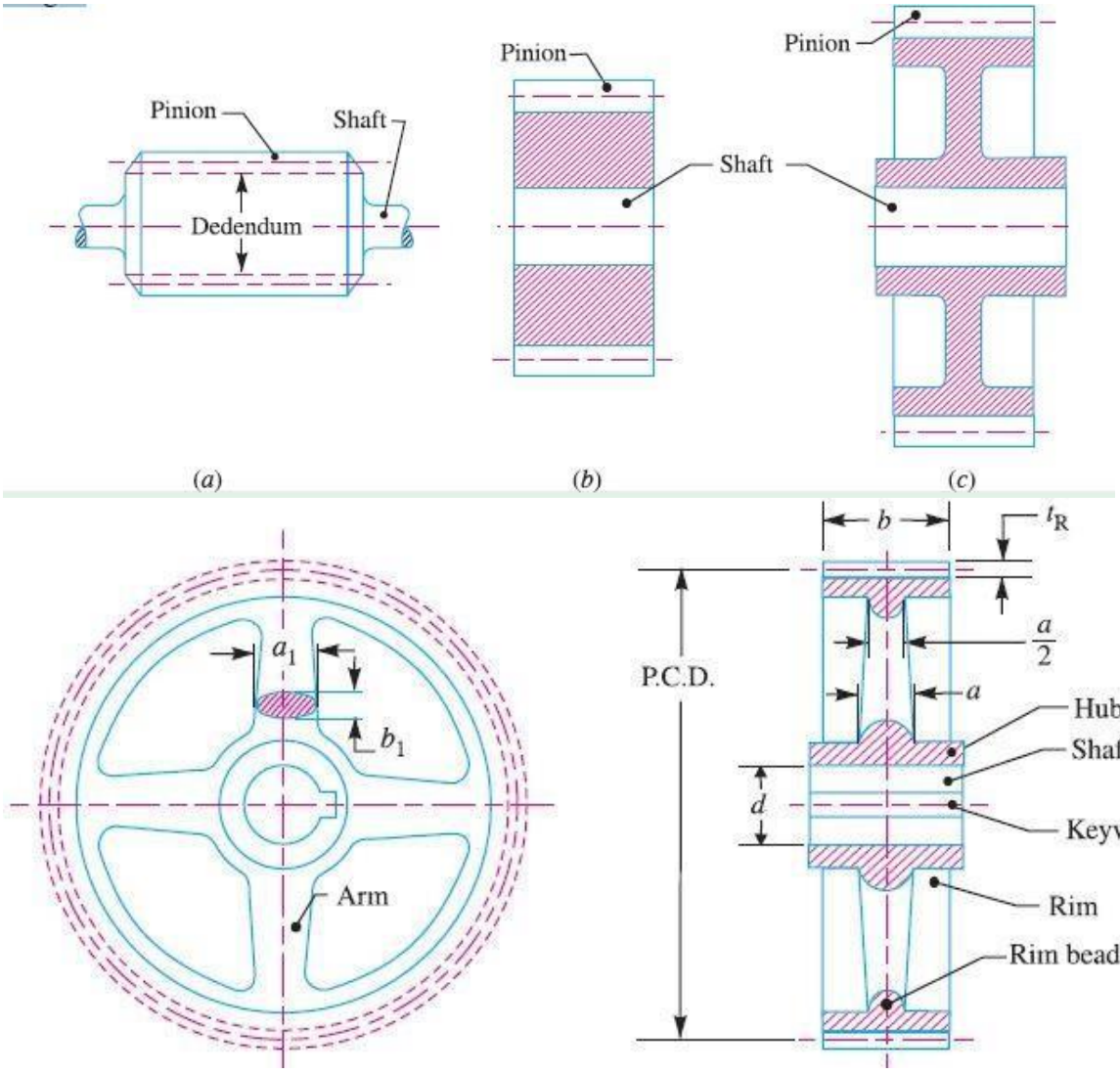

Large gears are provided with arms to join the hub and the rim, as shown in Fig.The number of arms depends upon the pitch circle diameter of the gear. The number of arms may be selected from the following table.

Number of arms for the gears.

S. No.	*Pitch circle diameter*	*Number of arms*
1.	Up to 0.5 m	4 or 5
2.	0.5 – 1.5 m	6
3.	1.5 – 2.0 m	8
4.	Above 2.0 m	10

The cross-section of the arms is most often elliptical, but other sections as shown in Fig.15 may also be used.

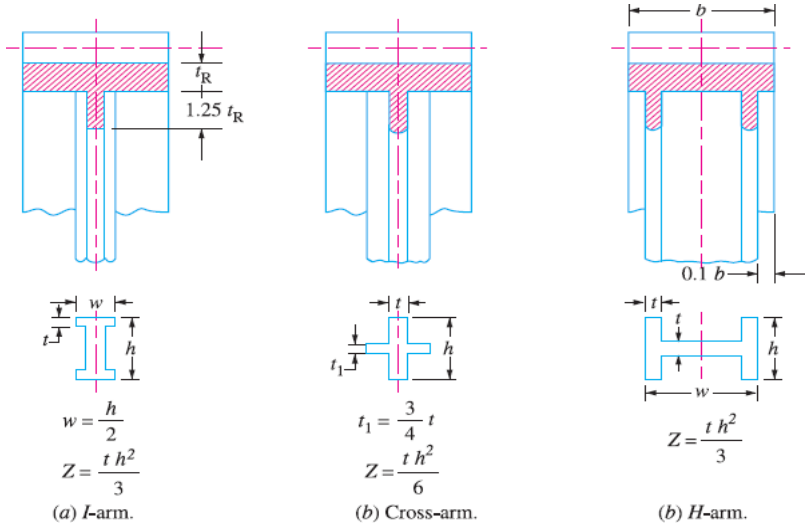

Cross-section of the arms.

The hub diameter is kept as 1.8 times the shaft diameter for steel gears, twice the shaft diameter for cast iron gears and 1.65 times the shaft diameter for forged steel gears used for light service. The length of the hub is kept as 1.25 times the shaft diameter for light service and should not be less than the face width of the gear.

The thickness of the gear rim should be as small as possible, but to facilitate casting and to avoid sharp changes of section, the minimum thickness of the rim is generally kept as half of the

circular pitch (or it may be taken as 1.6 *m* to 1.9 *m*, where *m* is the module). The thickness of rim (t_R) may

$$t_R = m\sqrt{\frac{T}{n}}$$

also be calculated by using the following relation, *i.e*.

Where T = Number of teeth, and
n = Number of arms.

The rim should be provided with a circumferential rib of thickness equal to the rim thickness.

SPUR GEAR – TOOTH FORCE ANALYSIS

As shown in Fig, the normal force F can be resolved into two components; a tangential force F which

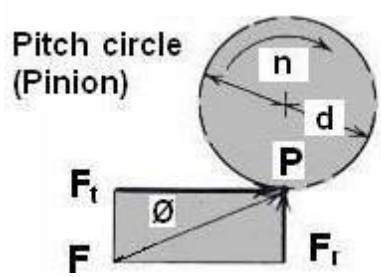

does transmit the power and radial component F which does no work but tends to push the gears apart. They can hence be written as,

F_t = F cos Ø

F_t = F sin Ø

F_t = F tan Ø

The pitch line velocity V, in meters per second, is given as

$$V = \frac{\pi d n}{6000}$$

$$W = \frac{F_t V}{1000}$$

1000 where d is the pitch diameter of the gear in millimeters and n is the rotating speed in rpm and power in kW.

Condition for Constant Velocity Ratio of Gears–Law of Gearing

Consider the portions of the two teeth, one on the wheel 1 (or pinion) and the other on the wheel 2, as shown by thick line curves in Fig. 28.7. Let the two teeth come in contact at point Q, and the wheels rotate in the directions as shown in the figure. Let T be the common tangent and MN be the common normal to the curves at point of contact Q. From the centres O1 and O2, draw O1M and O2N perpendicular to MN. A little consideration will show that the point Q moves in the direction QC, when considered as a point on wheel 1, and in the direction QD when considered as a point on wheel 2. Let v1 and v2 be the velocities of the point Q on the wheels 1 and 2 respectively. If the teeth are to remain in contact, then the components of these velocities along the common normal MN must be equal.

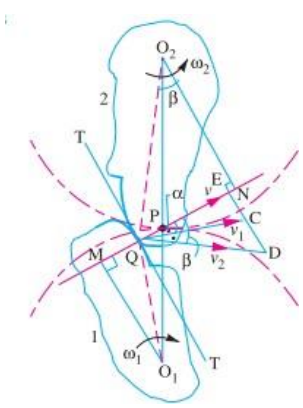

$$\therefore \quad v_1 \cos\alpha = v_2 \cos\beta$$

or $$(\omega_1 \times O_1Q)\cos\alpha = (\omega_2 \times O_2Q)\cos\beta$$

$$(\omega_1 \times O_1Q)\frac{O_1M}{O_1Q} = (\omega_2 \times O_2Q)\frac{O_2N}{O_2Q}$$

$$\therefore \quad \omega_1 . O_1M = \omega_2 . O_2N$$

or $$\frac{\omega_1}{\omega_2} = \frac{O_2N}{O_1M} \quad ...(i)$$

Also from similar triangles O_1MP and O_2NP,

$$\frac{O_2N}{O_1M} = \frac{O_2P}{O_1P} \quad ...(ii)$$

Combining equations (*i*) and (*ii*), we have

$$\frac{\omega_1}{\omega_2} = \frac{O_2N}{O_1M} = \frac{O_2P}{O_1P} \quad ...(iii)$$

We see that the angular velocity ratio is inversely proportional to the ratio of the distance of P from the centers O1 and O2, or the common normal to the two surfaces at the point of contact Q intersects the line of centers at point P which divides the centre distance inversely as the ratio of angular velocities. Therefore, in order to have a constant angular velocity ratio for all positions of the wheels, P must be the fixed point (called pitch point) for the two wheels. In other words, the common normal at the point of contact between a pair of teeth must always pass through the pitch point. This is fundamental condition which must be satisfied while designing the profiles for the teeth of gear wheels. It is also known as law of gearing.

Beam Strength of Gear Teeth – Lewis Equation

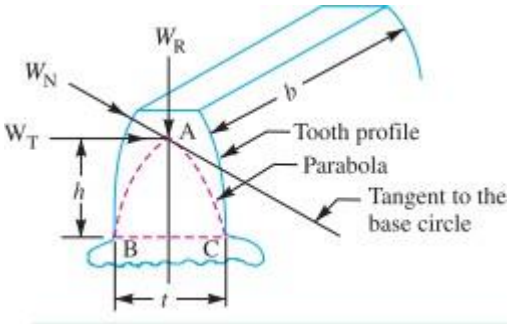

The beam strength of gear teeth is determined from an equation (known as *Lewis equation) and the load carrying ability of the toothed gears as determined by this equation gives satisfactory results. In the investigation, Lewis assumed that as the load is being transmitted from one gear to another, it is all given and taken by one tooth, because it is not always safe to assume that the load is distributed among several teeth. When contact begins, the load is assumed to be at the end of the driven teeth and as contact ceases, it is at the end of the driving teeth. This may not be true when the number of teeth in a pair of mating gears is large, because the load may be distributed among several n teeth. But it is almost certain that at some time during the contact of teeth, the proper distribution of load does not exist and that one tooth must transmit the full load. In any pair of gears having unlike number of teeth, the gear which have the fewer

teeth (i.e. pinion) will be the weaker, because the tendency toward undercutting of the teeth becomes more pronounced in gears as the number of teeth becomes smaller. Consider each tooth as a cantilever beam loaded by a normal load (WN) as shown in Fig. It is resolved into two components i.e. tangential component (WT) and radial component (WR) acting perpendicular and parallel to the centre line of the tooth respectively. The tangential component (WT) induces a bending stress which tends to break the tooth. The radial component (WR) induces a compressive stress of relatively small magnitude; therefore its effect on the tooth may be neglected. Hence, the bending stress is used as the basis for design calculations. The critical section or the section of maximum bending stress may be obtained by drawing a parabola through A and tangential to the tooth curves at B and C. This parabola, as shown dotted in Fig. Outlines a beam of uniform strength, i.e. if the teeth are shaped like a parabola, it will have the same stress at all the sections. But the tooth is larger than the parabola at every section except BC. We therefore, conclude that the section BC is the section of maximum stress or the critical section. The maximum value of the bending stress (or the permissible working stress), at the section BC is given by

$$\sigma_w = M.y / I \qquad ...(i)$$

where M = Maximum bending moment at the critical section $BC = W_T \times h$,

W_T = Tangential load acting at the tooth,

h = Length of the tooth,

y = Half the thickness of the tooth (t) at critical section $BC = t/2$,

I = Moment of inertia about the centre line of the tooth $= b.t^3/12$,

b = Width of gear face.

Substituting the values for M, y and I in equation (i), we get

$$\sigma_w = \frac{(W_T \times h)\, t/2}{b.t^3/12} = \frac{(W_T \times h) \times 6}{b.t^2}$$

or $$W_T = \sigma_w \times b \times t^2 / 6\,h$$

Let $t = x \times p_c$, and $h = k \times p_c$; where x and k are constants.

$$\therefore \quad W_T = \sigma_w \times b \times \frac{x^2 . p_c^2}{6k.p_c} = \sigma_w \times b \times p_c \times \frac{x^2}{6k}$$

Substituting $x^2 / 6k = y$, another constant, we have

$$W_T = \sigma_w . b . p_c . y = \sigma_w . b . \pi m . y \qquad ...(\because p_c = \pi m)$$

The quantity y is known as ***Lewis form factor*** or ***tooth form factor*** and W_T (which is the tangential load acting at the tooth) is called the ***beam strength of the tooth.***

Since $y = \frac{x^2}{6k} = \frac{t^2}{(p_c)^2} \times \frac{p_c}{6h} = \frac{t^2}{6h.p_c}$, therefore in order to find the value of y, the

Dynamic Tooth Load

In the previous article, the velocity factor was used to make approximate allowance for the effect of dynamic loading. The dynamic loads are due to the following reasons:

1. Inaccuracies of tooth spacing,

2. Irregularities in tooth profiles, and

3. Deflections of teeth under load.

A closer approximation to the actual conditions may be made by the use of equations based on

extensive series of tests, as follows :

$W_D = W_T + W_I$

Where W_D = Total dynamic load,

W_T = Steady load due to transmitted torque, and

W_I = Increment load due to dynamic action. The increment load (W_I) depends upon the pitch line velocity, the face width, material of the gears, the accuracy of cut and the tangential load. For average conditions, the **dynamic load is determined by using the following Buckingham equation, i.e.**

$$W_D = W_T + W_I = W_T + \frac{21\,v\,(b.C + W_T)}{21\,v + \sqrt{b.C + W_T}}$$

where W_D = Total dynamic load in newtons,
W_T = Steady transmitted load in newtons,
v = Pitch line velocity in m/s,
b = Face width of gears in mm, and
C = A deformation or dynamic factor in N/mm.

$$C = \frac{K.e}{\frac{1}{E_P} + \frac{1}{E_G}}$$

K = A factor depending upon the form of the teeth.
= 0.107, for $14\frac{1}{2}°$ full depth involute system.
= 0.111, for 20° full depth involute system.
= 0.115 for 20° stub system.
E_P = Young's modulus for the material of the pinion in N/mm^2.
E_G = Young's modulus for the material of gear in N/mm^2.
e = Tooth error action in mm.

Static Tooth Load

The static tooth load (also called beam strength or endurance strength of the tooth) is obtained by Lewis formula by substituting flexural endurance limit or elastic limit stress (σ_e) in place of permissible working stress (σ_w).

∴ Static tooth load or beam strength of the tooth,

$$W_S = \sigma_e.b.p_c.y = \sigma_e.b.\pi\, m.y$$

Wear Tooth Load

$W_w = D_P.b.Q.K$

W_w = Maximum or limiting load for wear in newtons,

D_P = Pitch circle diameter of the pinion in mm,

b = Face width of the pinion in mm,

Q = Ratio factor

$$= \frac{2 \times V.R.}{V.R. + 1} = \frac{2T_G}{T_G + T_P}, \text{ for external gears}$$

$$= \frac{2 \times V.R.}{V.R. - 1} = \frac{2T_G}{T_G - T_P}, \text{ for internal gears.}$$

$V.R.$ = Velocity ratio = T_G / T_P,

K = Load-stress factor (also known as material combination factor) in N/mm^2.

The load stress factor depends upon the maximum fatigue limit of compressive stress, the pressure angle and the modulus of elasticity of the materials of the gears. According to Buckingham, the load stress factor is given by the following relation :

$$K = \frac{(\sigma_{es})^2 \sin\phi}{1.4}\left(\frac{1}{E_P} + \frac{1}{E_G}\right)$$

where σ_{es} = Surface endurance limit in MPa or N/mm^2,

ϕ = Pressure angle,

E_P = Young's modulus for the material of the pinion in N/mm^2, and

E_G = Young's modulus for the material of the gear in N/mm^2.

The values of surface endurance limit (σ_{es}) are given in the following table.

1. The following particulars of a single reduction spur gear are given: Gear ratio = 10 : 1; Distance between centres = 660 mm approximately; Pinion transmits 500 kW at 1800 r.p.m.; Involute teeth of standard proportions (addendum = m) with pressure angle of 22.5°; Permissible normal pressure between teeth = 175 N per mm of width.
   Find: 1. The nearest standard module if no interference is to occur; 2. The number of teeth on each wheel; 3. The necessary width of the pinion; and 4. The load on the bearings of the wheels due to power transmitted.

Solution : Given : $G = T_G / T_P = D_G / D_P = 10$; $L = 660$ mm ; $P = 500$ kW $= 500 \times 10^3$ W ; $N_P = 1800$ r.p.m. ; $\phi = 22.5°$; $W_N = 175$ N/mm width

1. Nearest standard module if no interference is to occur

Let m = Required module,
T_P = Number of teeth on the pinion,
T_G = Number of teeth on the gear,
D_P = Pitch circle diameter of the pinion, and
D_G = Pitch circle diameter of the gear.

We know that minimum number of teeth on the pinion in order to avoid interference,

$$T_P = \frac{2 A_W}{G\left[\sqrt{1 + \frac{1}{G}\left(\frac{1}{G} + 2\right)\sin^2\phi} - 1\right]}$$

$$= \frac{2 \times 1}{10\left[\sqrt{1 + \frac{1}{10}\left(\frac{1}{10} + 2\right)\sin^2 22.5°} - 1\right]} = \frac{2}{0.15} = 13.3 \text{ say } 14$$

... ($\because A_W = 1$ module)

$\therefore$ $T_G = G \times T_P = 10 \times 14 = 140$ ...($\because T_G / T_P = 10$)

We know that $L = \frac{D_G}{2} + \frac{D_P}{2} = \frac{D_G}{2} + \frac{10 D_P}{2} = 5.5\, D_P$ ...($\because D_G / D_P = 10$)

$\therefore$ $660 = 5.5\, D_P$ or $D_P = 660 / 5.5 = 120$ mm

We also know that $D_P = m \,.\, T_P$

$\therefore$ $m = D_P / T_P = 120 / 14 = 8.6$ mm

Since the nearest standard value of the module is 8 mm, therefore we shall take

$m = 8$ mm **Ans.**

2. Number of teeth on each wheel

We know that number of teeth on the pinion,

$T_P = D_P / m = 120 / 8 = 15$ **Ans.**

and number of teeth on the gear,

$T_G = G \times T_P = 10 \times 15 = 150$ **Ans.**

3. Necessary width of the pinion

We know that the torque acting on the pinion,

$$T = \frac{P \times 60}{2\pi N_P} = \frac{500 \times 10^3 \times 60}{2\pi \times 1800} = 2652 \text{ N-m}$$

$\therefore$ Tangential load, $W_T = \frac{T}{D_P / 2} = \frac{2652}{0.12/2} = 44\,200$ N ...($\because D_P$ is taken in metres)

and normal load on the tooth,

$$W_N = \frac{W_T}{\cos\phi} = \frac{44\,200}{\cos 22.5°} = 47\,840 \text{ N}$$

Since the normal pressure between teeth is 175 N per mm of width, therefore necessary width of the pinion,

$$b = \frac{47\,840}{175} = 273.4 \text{ mm}$$ **Ans.**

4. Load on the bearings of the wheels

We know that the radial load on the bearings due to the power transmitted,

$W_R = W_N \,.\, \sin\phi = 47\,840 \times \sin 22.5° = 18\,308$ N $= 18.308$ kN **Ans.**

INDUSTRIAL APPLICATIONS

1. Spur gear in Metal cutting machine

2. **Spur gear in marine engine**

3. Spur gear used in fuel pump

4. spur gear in Automobile Gear box

5. Helical gear in fertilize industry

6. Helical gear for food Industries

TUTORIAL QUESTIONS

1. Discuss the design procedure of spur gears?
2. Derive Lewis equation for beam strength of gear tooth on spur gears
3. Write expressions for static limiting wear load, dynamic load for gear tooth of spur gear explain various terms used.
4. Explain the following terms used in helical gears. (i). Helix angle (ii) Normal Pitch (iii) Axial Pitch.
5. How shaft and arms for spur gears are designed?

6. Mention four important types of gears and discuss their applications and their materials used.
7. Terms used in helical gears.
8. Advantages and disadvantages of Gears?
9. Define a) Addendum b) Dedendum C)Module ?
10. Define a) Diametral pitch b) Clearance C) Pitch circle?
11. A pair of helical gears consist of a 20 teeth pinion meshing with a 100 teeth gear. The pinion rotates at 720 r.p.m. The normal pressure angle is 20° while the helix angle is 25°. The face width is 40 mm and the normal module is 4 mm. The pinion as well as gear are made of steel having ultimate strength of 600 MPa and heat treated to a surface hardness of 300 B.H.N. The service factor and factor of safety are 1.5 and 2 respectively. Assume that the velocity factor accounts for the dynamic load and calculate the power transmitting capacity of the gears.
12. 1. Calculate the power that can be transmitted safely by a pair of spur gears with the data given below. Calculate also the bending stresses induced in the two wheels when the pair transmits this power. Number of teeth in the pinion = 20 Number of teeth in the gear = 80 Spur Gears „ Module = 4 mm Width of teeth = 60 mm ,Tooth profile = 20° involute ,Allowable bending strength of the material = 200 MPa, for pinion = 160 MPa, for gear Speed of the pinion = 400 r.p.m. Service factor = 0.8
Lewis form factor = 0.154 –0.192/ T Velocity factor = 3 /3 + v.
13. A pair of helical gears is to transmit 15 kW. The teeth are 20° stub in diametral plane and have a helix angle of 45°. The pinion runs at 10 000 r.p.m. and has 80 mm pitch diameter. The gear has 320 mm pitch diameter. If the gears are made of cast steel having allowable static strength of 100 MPa; determine a suitable module and face width from static strength considerations and check the gears for wear, given σes = 618 MPa.
14. A pair of helical gears consists of a 20 teeth pinion meshing with a 100 teeth gear. The pinion rotates at 720 r.p.m. The normal pressure angle is 20° while the helix angle is 25°. The face width is 40 mm and the normal module is 4 mm. The pinion as well as gear is made of steel having ultimate strength of 600 MPa and heat treated to a surface hardness of 300 B.H.N. The service factor and factor of safety are 1.5 and 2 respectively. Assume that the velocity factor accounts for the dynamic load and calculate the power transmitting capacity of the gears.
15. Explain the different causes of gear tooth failures and suggest possible remedies to avoid such failures. And Write the expressions for static, limiting wear load and dynamic load for spur gears and explain the various terms used there in.

ASSIGNMENT QUESTIONS

1. The following particulars of a single reduction spur gear are given : Gear ratio = 10 : 1; Distance between centres = 660 mm approximately; Pinion transmits 500 kW at 1800 r.p.m. Involute teeth of standard proportions (addendum = m) with pressure angle of 22.5°; Permissible normal pressure between teeth = 175 N per mm of width.

   Find: 1. the nearest standard module if no interference is to occur;

   2. The number of teeth on each wheel;

   3. The necessary width of the pinion; and

   4. The load on the bearings of the wheels due to power transmitted.

2. A pair of straight teeth spur gears is to transmit 20 kW when the pinion rotates at 300 r.p.m. The velocity ratio is 1 : 3. The allowable static stresses for the pinion and gear materials are 120 MPa and 100 MPa respectively. The pinion has 15 teeth and its face width is 14 times the module. Determine: 1. module; 2. face width; and 3. pitch circle diameters of both the pinion and the gear from the standpoint of strength only, taking into consideration the effect of the dynamic loading. The tooth form factor y can be taken as y = 0.514 –. 0 912 /No of teeth and the velocity factor Cv = , 3 /3+v where v is expressed in m / s.
3. A motor shaft rotating at 1500 r.p.m. has to transmit 15 kW to a low speed shaft with a speed reduction of 3:1. The teeth are 1 ° 14 /2 involute with 25 teeth on the pinion. Both the pinion and gear are made of steel with a maximum safe stress of 200 MPa. A safe stress of 40 MPa may be taken for the shaft on which the gear is mounted and for the key. Design a spur gear drive to suit the above conditions. Also sketch the spur gear drive. Assume starting torque to be 25% higher than the running torque.
4. A pair of helical gears with 30° helix angle is used to transmit 15 kW at 10 000 r.p.m. of the pinion. The velocity ratio is 4 : 1. Both the gears are to be made of hardened steel of static strength 100 N/mm2. The gears are 20° stub and the pinion is to have 24 teeth. The face width may be taken as 14 times the module. Find the module and face width from the standpoint of strength and check the gears for wear.
5. a) Design Considerations for a Gear Drive?

   b) Beam Strength of Gear Teeth – Lewis Equation?

UNIT-4

SPUR AND HELICAL GEARS

MRCET CAMPUS

UGC Autonomous

DEPARTMENT OF MECHANICAL ENGINEERING

INTRODUCTION

A gear is a kind of machine element in which teeth are cut around cylindrical or cone shaped surfaces with equal spacing. By meshing a pair of these elements, they are used to transmit rotations and forces from the driving shaft to the driven shaft. Gears can be classified by shape as involutes, cycloidal and trochoidal gears. Also, they can be classified by shaft positions as parallel shaft gears, intersecting shaft gears, and non-parallel and non-intersecting shaft gears. The history of gears is old and the use of gears already appears in ancient Greece in B.C. in the writing of Archimedes.

INTRODUCTION

Applications of Gears

- *Toys and Small Mechanisms* – small, low load, low cost
  kinematic analysis
- *Appliance gears* – long life, low noise & cost, low to moderate load
  kinematic & some stress analysis
- *Power transmission* – long life, high load and speed
  kinematic & stress analysis
- *Aerospace gears* – light weight, moderate to high load
  kinematic & stress analysis
- *Control gears* – long life, low noise, precision gears
  kinematic & stress analysis

GEARS

Spur gears – tooth profile is parallel to the axis of rotation, transmits motion between parallel shafts.

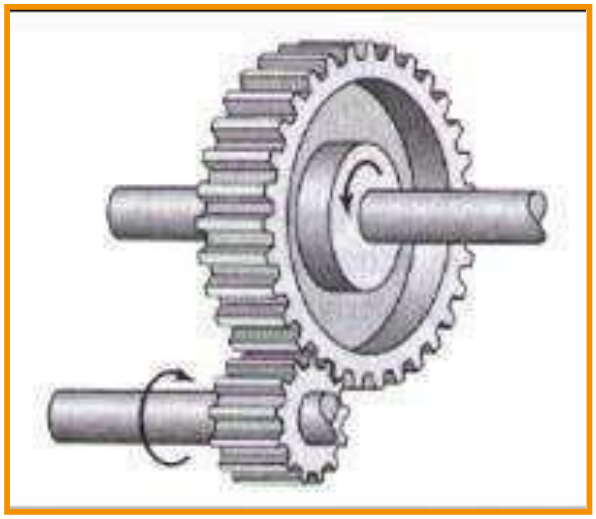

Internal gears

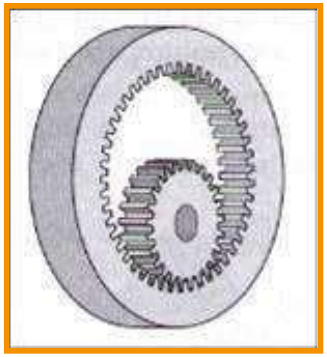

Helical gears– teeth are inclined to the axis of rotation, the angle provides more gradual engagement of the teeth during meshing, transmits motion between parallel shafts.

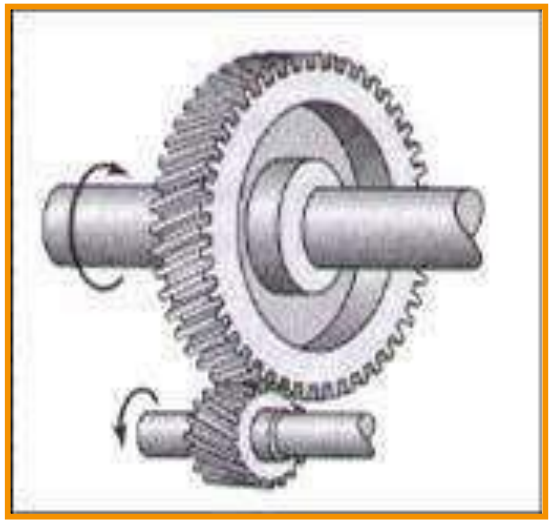

GEARS

GEAR MATERIALS

- Cast iron
- Steel
- Brass
- Bronze alloys
- Plastic

GEAR STRUCTURE

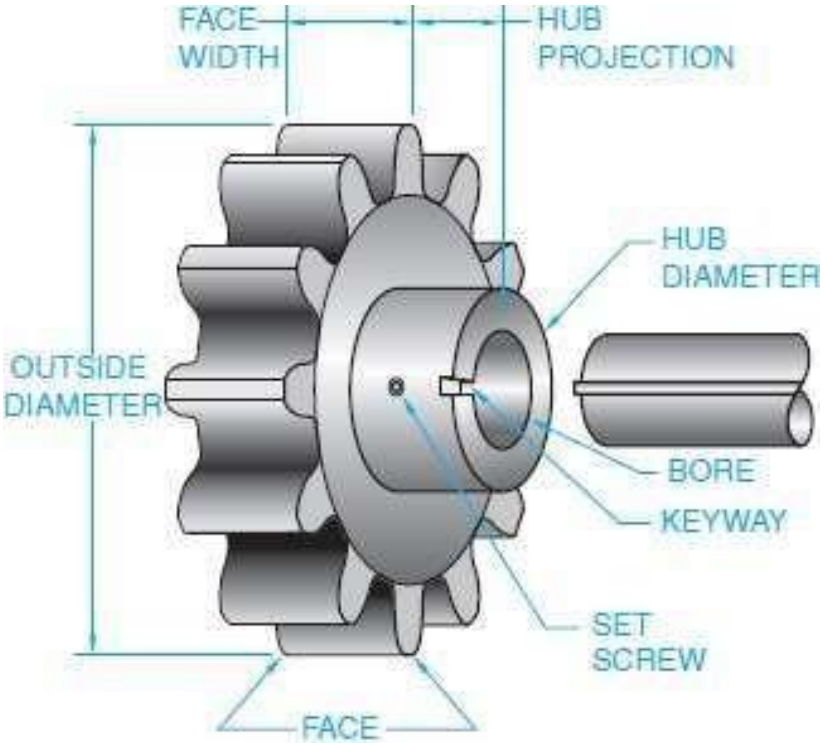

GEARS

Beam Strength of Gear Teeth – Lewis Equation \

∴Static tooth load or beam strength of the tooth,

$$W_S = \sigma_e . b . p_c . y = \sigma_e . b . \pi . m . y$$

- **Dynamic tooth load or beam strength**

$$W_D = W_T + W_I = W_T + \frac{21\,v\,(b.C + W_T)}{21\,v + \sqrt{b.C + W_T}}$$

where

W_D = Total dynamic load in newtons,

W_T = Steady transmitted load in newtons,

v = Pitch line velocity in m/s,

b = Face width of gears in mm, and

C = A deformation or dynamic factor in N/mm.

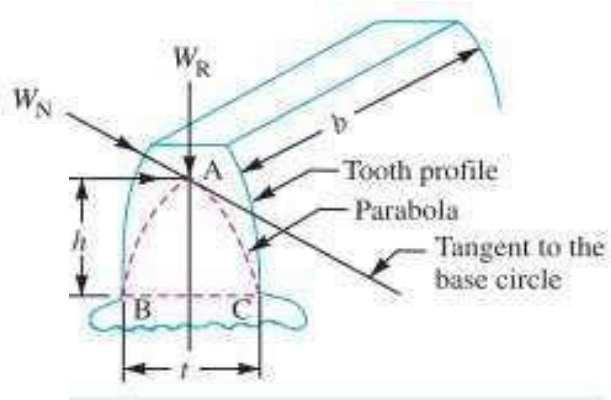

UNIT 5

POWER SCREWS

Course objectives:

Implement basic principles for the design of power screws And the forces, couples, torques etc,

Course Outcomes:

Analyze power screws subjected to loading

Introduction

The power screws (also known as ***translation screws***) are used to convert rotary motion into translator motion. For example, in the case of the lead screw of lathe, the rotary motion is available but the tool has to be advanced in the direction of the cut against the cutting resistance of the material. In case of screw jack, a small force applied in the horizontal plane is used to raise or lower a large load. Power screws are also used in vices, testing machines, presses, etc.

In most of the power screws, the nut has axial motion against the resisting axial force while the screw rotates in its bearings. In some screws, the screw rotates and moves axially against the resisting force while the nut is stationary and in others the nut rotates while the screw moves axially with no rotation.

Types of Screw Threads used for Power Screws

Following are the three types of screw threads mostly used for power screws:

1. ***Square thread.*** A square thread, as shown in Fig. 17.1 (*a*), is adapted for the transmission of power in either direction. This thread results in maximum efficiency and minimum radial or bursting

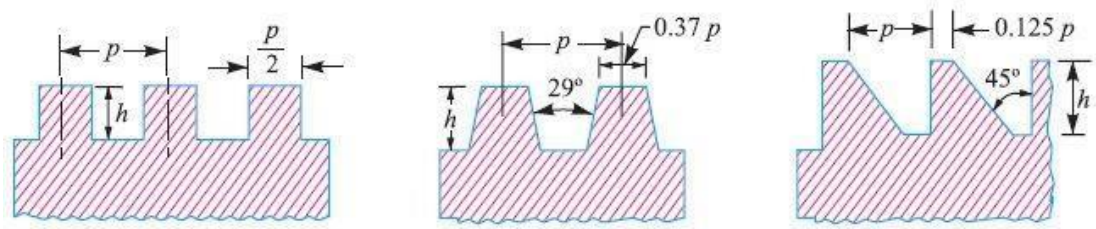

$h = 0.5\,p$ (*a*) Square thread. $h = 0.5\,p + 0.25$ mm (*b*) Acme thread. $h = 0.75\,p$ (*c*) Buttress thread.

Pressure on the nut. It is difficult to cut with taps and dies. It is usually cut on a lathe with a

single point tool and it cannot be easily compensated for wear. The square threads are employed in screw jacks, presses and clamping devices. The standard dimensions for square threads according to IS: 4694 – 1968 (Reaffirmed 1996), are shown in Table 17.1 to 17.3.

2. ***Acme or trapezoidal thread.*** An acme or trapezoidal thread, as shown in Fig. 17.1 (*b*), is a modification of square thread. The slight slope given to its sides lowers the efficiency slightly than square thread and it also introduce some bursting pressure on the nut, but increases its area in shear. It is used where a split nut is required and where provision is made to take up wear as in the lead screw of a lathe.

Wear may be taken up by means of an adjustable split nut. An acme thread may be cut by means of dies and hence it is more easily manufactured than square thread. The standard dimensions for acme or trapezoidal threads are shown in Table 17.4 (Page 630).

3. ***Buttress thread.*** A buttress thread, as shown in Fig. 5.1 (*c*), is used when large forces act along the screw axis in one direction only. This thread combines the higher efficiency of square thread and the ease of cutting and the adaptability to a split nut of acme thread. It is stronger than other threads because of greater thickness at the base of the thread. The buttress thread has limited use for power transmission. It is employed as the thread for light jack screws and vices.

Multiple Threads

The power screws with multiple threads such as double, triple etc. are employed when it is desired to secure a large lead with fine threads or high efficiency. Such type of threads is usually found in high speed actuators.

Torque Required to Raise Load by Square Threaded Screws

The torque required to raise a load by means of square threaded screw may be determined by considering a screw jack as shown in Fig. 5.2 (*a*). The load to be raised or lowered is placed on the head of the square threaded rod which is rotated by the application of an effort at the end of lever for lifting or lowering the load.

A little consideration will show that if one complete turn of a screw thread be imagined to be unwound,

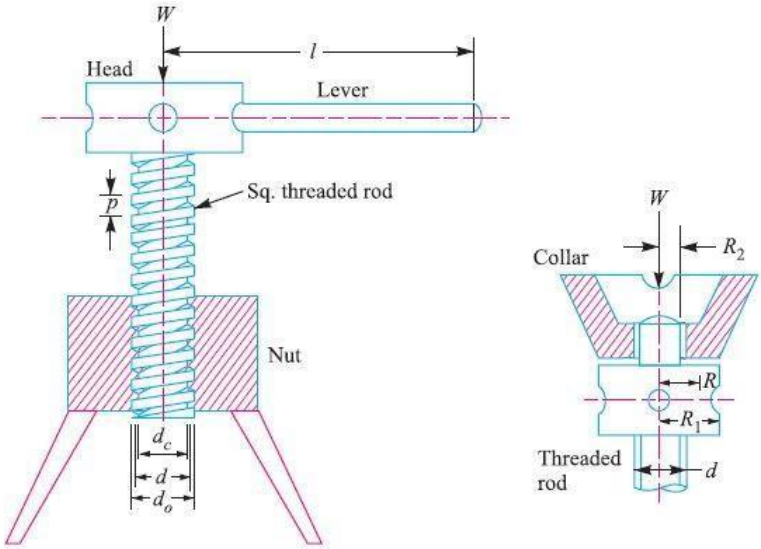

(*a*) Screw jack. (*b*) Thrust collar.

from the body of the screw and developed, it will form an inclined plane as shown in Fig. (*a*).

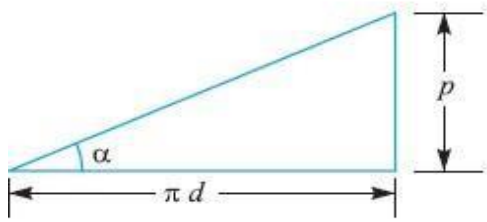

(*a*) Development of a screw.

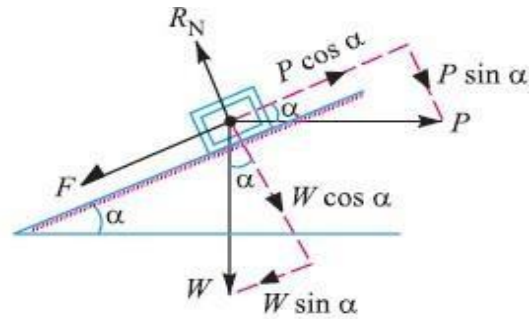

(*b*) Forces acting on the screw.

Let p = Pitch of the screw,

d = Mean diameter of the screw,

$\alpha = Helix\ angle$

P = Effort applied at the circumference of the screw to lift the load,

W = Load to be lifted, and

$\mu = co\ efficient\ of\ friction$

= tan Ø , is the friction angle

From the geometry of the Fig. (*a*), we find that

$$\tan\alpha = p / \pi d$$

Since the principle, on which a screw jack works is similar to that of an inclined plane, therefore the force applied on the circumference of a screw jack may be considered to be horizontal as shown in Fig. 5.3 (*b*).

Since the load is being lifted, therefore the force of friction ($F = \mu.R_N$) will act downwards. All the forces acting on the body are shown in Fig. 5.3 (*b*).

Resolving the forces along the plane,

$$P\cos\alpha = W\sin\alpha + F = W\sin\alpha + \mu.R_N \qquad \text{…..(i)}$$

and resolving the forces perpendicular to the plane

$$R_N = P\sin\alpha + W\cos\alpha \qquad \text{…..(ii)}$$

Substituting this value of *R*N in equation ***(i)***, we have

$$P \cos \alpha = W \sin \alpha + \mu (P \sin \alpha + W \cos \alpha)$$
$$= W \sin \alpha + \mu P \sin \alpha + \mu W \cos \alpha$$

or $$P \cos \alpha - \mu P \sin \alpha = W \sin \alpha + \mu W \cos \alpha$$

or $$P (\cos \alpha - \mu \sin \alpha) = W (\sin \alpha + \mu \cos \alpha)$$

$$\therefore \quad P = W \times \frac{(\sin \alpha + \mu \cos \alpha)}{(\cos \alpha - \mu \sin \alpha)}$$

Substituting the value of $\mu = \tan \phi$ in the above equation, we get

or $$P = W \times \frac{\sin \alpha + \tan \phi \cos \alpha}{\cos \alpha - \tan \phi \sin \alpha}$$

Multiplying the numerator and denominator by $\cos \phi$, we have

$$P = W \times \frac{\sin \alpha \cos \phi + \sin \phi \cos \alpha}{\cos \alpha \cos \phi - \sin \alpha \sin \phi}$$
$$= W \times \frac{\sin (\alpha + \phi)}{\cos (\alpha + \phi)} = W \tan (\alpha + \phi)$$

$\therefore$ Torque required to overcome friction between the screw and nut,

$$T_1 = P \times \frac{d}{2} = W \tan (\alpha + \phi) \frac{d}{2}$$

When the axial load is taken up by a thrust collar as shown in Fig. 5.2 (*b*), so that the load does not rotate with the screw, then the torque required to overcome friction at the collar,

$$T_2 = \frac{2}{3} \times \mu_1 \times W \left[\frac{(R_1)^3 - (R_2)^3}{(R_1)^2 - (R_2)^2} \right]$$ ... (Assuming uniform pressure conditions)

$$= \mu_1 \times W \left(\frac{R_1 + R_2}{2} \right) = \mu_1 W R$$ ....(Assuming uniform wear conditions)

where R_1 and R_2 = Outside and inside radii of collar,

R = Mean radius of collar $= \frac{R_1 + R_2}{2}$, and

μ_1 = Coefficient of friction for the collar.

Total torque required to overcome friction (*i.e.* to rotate the screw),
$T = T_1 + T_2$

If an effort $P1$ is applied at the end of a lever of arm length l, then the total torque required to overcome friction must be equal to the torque applied at the end of lever, *i.e.*

$$T = P \times \frac{d}{2} = P_1 \times l$$

$$T = P \times \frac{d}{2} = P_1 \times l$$

Notes: 1. When the *nominal diameter (*do*) and the **core diameter (*dc*) of the screw is given, then

Mean diameter of screw,

$$d = \frac{d_o + d_c}{2} = d_o - \frac{p}{2} = d_c + \frac{p}{2}$$

2. Since the mechanical advantage is the ratio of the load lifted (W) to the effort applied (P_1) at the end of the lever, therefore mechanical advantage,

$$\text{M.A.} = \frac{W}{P_1} = \frac{W \times 2l}{P \times d} \qquad \ldots\left(\because P \times \frac{d}{2} = P_1 \times l \text{ or } P_1 = \frac{P \times d}{2l}\right)$$

$$= \frac{W \times 2l}{W \tan(\alpha + \phi)\, d} = \frac{2l}{d \tan(\alpha + \phi)}$$

Efficiency of Square Threaded Screws

The efficiency of square threaded screws may be defined as the ratio between the ideal effort (*i.e.* the effort required to move the load, neglecting friction) to the actual effort (*i.e.* the effort required to move the load taking friction into account).

We have seen in fig. that the effort applied at the circumference of the screw to lift the load is

$$P = W \tan(\alpha + \emptyset) \qquad \ldots(i)$$

where W = Load to be lifted,

α= Helix angle,

The value of effort *P*0 necessary to raise the load will then be given by the equation,

$$P_0 = W \tan(\alpha) \qquad \text{substituting } \emptyset = 0 \text{ in eqn (i)}$$

$$\therefore \text{Efficiency,} \quad \eta = \frac{\text{Ideal effort}}{\text{Actual effort}} = \frac{P_0}{P} = \frac{W \tan\alpha}{W \tan(\alpha + \phi)} = \frac{\tan\alpha}{\tan(\alpha + \phi)}$$

This shows that the efficiency of a screw jack, is independent of the load raised.

In the above expression for efficiency, only the screw friction is considered. However, if the screw friction

$$\eta = \frac{\text{Torque required to move the load, neglecting friction}}{\text{Torque required to move the load, including screw and collar friction}}$$

$$= \frac{T_0}{T} = \frac{P_0 \times d/2}{P \times d/2 + \mu_1 W.R}$$

and collar friction is taken into account, then

Note: The efficiency may also be defined as the ratio of mechanical advantage to the velocity ratio. We know that mechanical advantage,

$$\text{M.A.} = \frac{W}{P_1} = \frac{W \times 2l}{P \times d} = \frac{W \times 2l}{W \tan(\alpha + \phi)\, d} = \frac{2l}{d \tan(\alpha + \phi)}$$

and velocity ratio, $$V.R. = \frac{\text{Distance moved by the effort } (P_1) \text{ in one revolution}}{\text{Distance moved by the load } (W) \text{ in one revolution}}$$

$$= \frac{2\pi l}{p} = \frac{2\pi l}{\tan\alpha \times \pi d} = \frac{2l}{d \tan\alpha} \qquad \ldots (\because \tan\alpha = p / \pi d)$$

$\therefore$ Efficiency, $$\eta = \frac{M.A.}{V.R.} = \frac{2l}{d \tan(\alpha + \phi)} \times \frac{d \tan\alpha}{2l} = \frac{\tan\alpha}{\tan(\alpha + \phi)}$$

Maximum Efficiency of a Square Threaded Screw

$$\eta = \frac{\tan\alpha}{\tan(\alpha + \phi)} = \frac{\sin\alpha / \cos\alpha}{\sin(\alpha + \phi) / \cos(\alpha + \phi)} = \frac{\sin\alpha \times \cos(\alpha + \phi)}{\cos\alpha \times \sin(\alpha + \phi)} \qquad \ldots(i)$$

Multiplying the numerator and denominator by 2, we have,

$$\eta = \frac{2 \sin\alpha \times \cos(\alpha + \phi)}{2 \cos\alpha \times \sin(\alpha + \phi)} = \frac{\sin(2\alpha + \phi) - \sin\phi}{\sin(2\alpha + \phi) + \sin\phi} \qquad \ldots(ii)$$

$$\ldots \left[\begin{array}{l} \because 2 \sin A \cos B = \sin(A + B) + \sin(A - B) \\ 2 \cos A \sin B = \sin(A + B) - \sin(A - B) \end{array}\right]$$

The efficiency given by equation *(ii)* will be maximum when $\sin(2\alpha + \phi)$ is maximum, *i.e.* when

$\sin(2\alpha + \phi) = 1$ or when $2\alpha + \phi = 90°$

$\therefore$ $2\alpha = 90° - \phi$ or $\alpha = 45° - \phi / 2$

Substituting the value of 2α in equation *(ii)*, we have maximum efficiency,

$$\eta_{max} = \frac{\sin(90° - \phi + \phi) - \sin\phi}{\sin(90° - \phi + \phi) + \sin\phi} = \frac{\sin 90° - \sin\phi}{\sin 90° + \sin\phi} = \frac{1 - \sin\phi}{1 + \sin\phi}$$

1. A vertical screw with single start square threads of 50 mm mean diameter and

12.5 mm pitch is raised against a load of 10 kN by means of a hand wheel, the boss of which is threaded to act as a nut. The axial load is taken up by a thrust collar which supports the wheel boss and has a mean diameter of 60 mm. The coefficient of friction is 0.15 for the screw and 0.18 for the collar. If the tangential force applied by each hand to the wheel is 100 N, find suitable diameter of the hand wheel.

Solution. Given : d = 50 mm ; p = 12.5 mm ; W = 10 kN = 10 × 10^3N ; D = 60 mm or

R = 30 mm ; μ = tan = 0.15 ; μ 1 = 0.18 ; P_1 = 100 N

We know that $\tan\alpha = \dfrac{p}{\pi d} = \dfrac{12.5}{\pi \times 50} = 0.08$

and the tangential force required at the circumference of the screw,

$$P = W \tan(\alpha + \phi) = W\left(\frac{\tan\alpha + \tan\phi}{1 - \tan\alpha \tan\phi}\right)$$

$$= 10 \times 10^3 \left[\frac{0.08 + 0.15}{1 - 0.08 \times 0.15}\right] = 2328 \text{ N}$$

We also know that the total torque required to turn the hand wheel,

$$T = P \times \frac{d}{2} + \mu_1 W R = 2328 \times \frac{50}{2} + 0.18 \times 10 \times 10^3 \times 30 \text{ N-mm}$$

= 58 200 + 54 000 = 112 200 N-mm ...***(i)***

Let $D1$ = Diameter of the hand wheel in mm.

$$T = 2 P_1 \times \frac{D_1}{2} = 2 \times 100 \times \frac{D_1}{2} = 100 D_1 \text{ N-mm} \qquad ...(ii)$$

We know that the torque applied to the hand wheel,

Equating equations ***(i)*** and ***(ii)***,

D_1 = 112 200 / 100 = 1122 mm = 1.122 m **Ans.**

Acme or Trapezoidal Threads

We know that the normal reaction in case of a square threaded screw is
RN = W cos α

where $\alpha = Helix\ angle$

But in case of Acme or trapezoidal thread, the normal reaction between the screw and nut is increased because the axial component of this normal reaction must be equal to the axial load (W).

Consider an Acme or trapezoidal thread as shown in Fig. 5.6.

Let 2β= angle of the ACME Thread=29^0

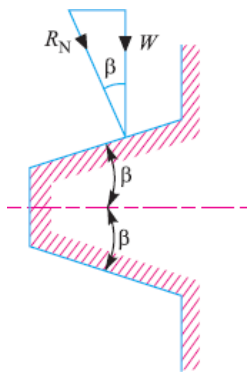

$$\therefore \qquad R_N = \frac{W}{\cos\beta}$$

and frictional force, $F = \mu . R_N = \mu \times \dfrac{W}{\cos\beta} = \mu_1 . W$

where $\mu / \cos\beta = \mu_1$, known as *virtual coefficient of friction.*

Notes : 1. When coefficient of friction, $\mu_1 = \dfrac{\mu}{\cos\beta}$ is considered, then the Acme thread is equivalent to a square thread.

2. All equations of square threaded screw also hold good for Acme threads. In case of Acme threads, μ_1 (*i.e.* $\tan\phi_1$) may be substituted in place of μ (*i.e.* $\tan\phi$). Thus for Acme threads,

$$P = W \tan(\alpha + \phi_1)$$

where ϕ_1 = Virtual friction angle, and $\tan\phi_1 = \mu_1$.

2. The lead screw of a lathe has Acme threads of 50 mm outside diameter and

8 mm pitch. The screw must exert an axial pressure of 2500 N in order to drive the tool carriage. The thrust is carried on a collar 110 mm outside diameter and 55 mm inside diameter and the lead screw rotates at 30 r.p.m. Determine (a) the power required to drive the screw; and (b) the efficiency of the lead screw. Assume a coefficient of friction of 0.15 for the screw and 0.12 for the collar.

Solution. Given : do = 50 mm ; p = 8 mm ; W = 2500 N ; $D1$ = 110 mm or $R1$ = 55 mm ;

$D2$ = 55 mm or $R2$ = 27.5 mm ;

(a) *Power required to drive the screw*

We know that mean diameter of the screw,

$$d = do - p / 2 = 50 - 8 / 2 = 46 \text{ mm}$$

$$\therefore \quad \tan\alpha = \frac{p}{\pi d} = \frac{8}{\pi \times 46} = 0.055$$

Since the angle for Acme threads is $2\beta = 29°$ or $\beta = 14.5°$, therefore virtual coefficient of frictic

$$\therefore \quad \tan\alpha = \frac{p}{\pi d} = \frac{8}{\pi \times 46} = 0.055$$

Since the angle for Acme threads is $2\beta = 29°$ or $\beta = 14.5°$, therefore virtual coefficient of friction,

$$\mu_1 = \tan\phi_1 = \frac{\mu}{\cos\beta} = \frac{0.15}{\cos 14.5°} = \frac{0.15}{0.9681} = 0.155$$

We know that the force required to overcome friction at the screw,

$$P = W \tan(\alpha + \phi_1) = W\left[\frac{\tan\alpha + \tan\phi_1}{1 - \tan\alpha \tan\phi_1}\right]$$

$$= 2500\left[\frac{0.055 + 0.155}{1 - 0.055 \times 0.155}\right] = 530 \text{ N}$$

and t

and torque required to overcome friction at the screw.

$$T_1 = P \times d / 2 = 530 \times 46 / 2 = 12\,190 \text{ N-mm}$$

We know that mean radius of collar,

$$R = \frac{R_1 + R_2}{2} = \frac{55 + 27.5}{2} = 41.25 \text{ mm}$$

Assuming uniform wear, the torque required to overcome friction at collars,

$T_2 = \mu_2 W R = 0.12 \times 2500 \times 41.25 = 12\,375$ N-mm

Total torque required to overcome the friction

$T = T1 + T2 = 12\,190 + 12\,375 = 24\,565$ N-mm = 24.565 N-m

$$= T.\omega = \frac{T \times 2\pi N}{60} = \frac{24.565 \times 2\pi \times 30}{60} = 77 \text{ W} = 0.077 \text{ kW} \qquad \textbf{Ans.}$$

$$\ldots (\because \omega = 2\pi N / 60)$$

We know that power required to drive the screw

$$= T \cdots \quad \frac{T \times 2\pi N}{} \quad \frac{24.565 \times 2\pi \times 30}{}$$

$$T_o = W \tan\alpha \times \frac{d}{2} = 2500 \times 0.055 \times \frac{46}{2} = 3163 \text{ N-mm} = 3.163 \text{ N-m}$$

$\therefore$ Efficiency of the lead screw,

$$\eta = \frac{T_o}{T} = \frac{3.163}{24.565} = 0.13 \text{ or } 13\% \qquad \textbf{Ans.}$$

(b) **Efficiency of the lead screw**We know that the torque required to drive the screw with no friction,

Stresses in Power Screws

A power screw must have adequate strength to withstand axial load and the applied torque. Following types of stresses are induced in the screw.

1. ***Direct tensile or compressive stress due to an axial load.*** The direct stress due to the axial load may be determined by dividing the axial load (*W*) by the minimum cross-sectional area of the screw (*Ac*) *i.e*. area corresponding to minor or core diameter (*dc*). Direct stress (tensile or compressive) =*W*/*A*

This is only applicable when the axial load is compressive and the unsupported length of the screw between the load and the nut is short. But when the screw is axially loaded in compression and the unsupported length of the screw between the load and the nut is too great, then the design must be based on column theory assuming suitable end conditions. In such cases, the cross- sectional area corresponding to core diameter may be obtained by using Rankine-Gordon formula or J.B. Johnson's formula. According to this,

$$W_{cr} = A_c \times \sigma_y \left[1 - \frac{\sigma_y}{4\,C\,\pi^2\,E}\left(\frac{L}{k}\right)^2\right]$$

$$\therefore \qquad \sigma_c = \frac{W}{A_c}\left[\frac{1}{1 - \frac{\sigma_y}{4\,C\,\pi^2\,E}\left(\frac{L}{k}\right)^2}\right]$$

W_{cr} = Critical load,

σ_y = Yield stress,

L = Length of screw,

k = Least radius of gyration,

C = End-fixity coefficient,

E = Modulus of elasticity, and

σ_c = Stress induced due to load W.

Note : In actual practice, the core diameter is first obtained by considering the screw under simple compression and then checked for critical load or buckling load for stability of the screw.

2. ***Torsional shear stress.*** Since the screw is subjected to a twisting moment, therefore torsional shear stress is induced. This is obtained by considering the minimum cross-section of the screw. We know that torque transmitted by the screw,

$$T = \frac{\pi}{16} \times \tau\,(d_c)^3$$

or shear stress induced,

$$\tau = \frac{16\,T}{\pi (d_c)^3}$$

When the screw is subjected to both direct stress and torsional shear stress, then the design must be based on maximum shear stress theory, according to which maximum shear stress on the minor

$$\tau_{max} = \frac{1}{2}\sqrt{(\sigma_t \text{ or } \sigma_c)^2 + 4\,\tau^2}$$

diameter section,

It may be noted that when the unsupported length of the screw is short, then failure will take place when the maximum shear stress is equal to the shear yield strength of the material. In this case,

$$\tau_y = \tau_{max} \times \text{Factor of safety}$$

Shear yield strength,

3. ***Shear stress due to axial load.*** The threads of the screw at the core or root diameter and the threads of the nut at the major diameter may shear due to the axial load. Assuming that the load is

$$\tau_{(screw)} = \frac{W}{\pi\, n\, .d_c .\, t}$$

uniformly distributed over the threads in contact, we have Shear stress for screw,

and shear stress for nut,

$$\tau_{(nut)} = \frac{W}{\pi\, n\, .d_o .\, t}$$

Where W = Axial load on the screw,

n = Number of threads in engagement,

dc = Core or root diameter of the screw,

do = Outside or major diameter of nut or screw, and

t = Thickness or width of thread.

4. ***Bearing pressure.*** In order to reduce wear of the screw and nut, the bearing pressure on the thread surfaces must be within limits. In the design of power screws, the bearing pressure depends upon the materials of the screw and nut, relative velocity between the nut and screw and the nature of lubrication. Assuming that the load is uniformly distributed over the threads in contact, the bearing pressure on the threads is given by

$$p_b = \frac{W}{\frac{\pi}{4}\left[(d_o)^2 - (d_c)^2\right] n} = \frac{{}^{*}W}{\pi\, d.t.n}$$

where d = Mean diameter of screw,

t = Thickness or width of screw $= p/2$, and

n = Number of threads in contact with the nut

$$= \frac{\text{Height of the nut}}{\text{Pitch of threads}} = \frac{h}{p}$$

Therefore, from the above expression, the height of nut or the length of thread engagement of the screw and nut may be obtained.

* We know that $\frac{(d_o)^2 - (d_c)^2}{4} = \frac{d_o + d_c}{2} \times \frac{d_o - d_c}{2} = d \times \frac{p}{2} = d.t$

The following table shows some limiting values of bearing pressures.

3 . A power screw having double start square threads of 25 mm nominal diameter and 5 mm pitch is acted upon by an axial load of 10 kN. The outer and inner diameters of screw collar are 50 mm and 20 mm respectively. The coefficient of thread friction and collar friction may be assumed as 0.2 and 0.15 respectively. The screw rotates at 12 r.p.m. Assuming uniform wear condition at the collar and allowable thread bearing pressure of 5.8 N/mm2, find: 1. the torque required to rotate the screw; 2. the stress in the screw; and 3. the number of threads of nut in engagement with screw.

Solution. Given : *do* = 25 mm ; *p* = 5 mm ; *W* = 10 kN = 10 × 103 N ; *D*1 = 50 mm or

R_1 = 25 mm ; D_2 = 20 mm or R_2 = 10 mm; μ_1 = 0.15 ; *N* = 12 r.p.m. ; p_b =5.8 N/mm2

1. *Torque required to rotate the screw* We know that mean diameter of the screw, *d* = *do* – *p* / 2 = 25 – 5 / 2 = 22.5 mm

Since the screw is a double start square threaded screw, therefore lead of the screw,

= 2 *p* = 2 × 5 = 10 mm

$$\therefore \qquad \tan\alpha = \frac{\text{Lead}}{\pi d} = \frac{10}{\pi \times 22.5} = 0.1414$$

We know that tangential force required at the circumference of the screw,

$$P = W \tan(\alpha + \phi) = W\left[\frac{\tan\alpha + \tan\phi}{1 - \tan\alpha \tan\phi}\right]$$

$$= 10 \times 10^3 \left[\frac{0.1414 + 0.2}{1 - 0.1414 \times 0.2}\right] = 3513 \text{ N}$$

and mean radius of the screw collar,

$$R = \frac{R_1 + R_2}{2} = \frac{25 + 10}{2} = 17.5$$

$\therefore$ Total torque required to rotate the screw,

$$T = P \times \frac{d}{2} + \mu_1 W R = 3513 \times \frac{22.5}{2} + 0.15 \times 10 \times 10^3 \times 17.5 \text{ N-mm}$$

$$= 65\,771 \text{ N-mm} = 65.771 \text{ N-m}$$ **Ans.**

2. *Stress in the screw*

We know that the inner diameter or core diameter of the screw,

$$dc = do - p = 25 - 5 = 20 \text{ mm}$$

-sectional area of the screw,

Corresponding cross

$$A_c = \frac{\pi}{4}(d_c)^2 = \frac{\pi}{4}(20)^2 = 314.2 \text{ mm}^2$$

We know that direct stress,

$$\sigma_c = \frac{W}{A_c} = \frac{10 \times 10^3}{314.2} = 31.83 \text{ N/mm}^2$$

and shear stress,

$$\tau = \frac{16\,T}{\pi (d_c)^3} = \frac{16 \times 65\,771}{\pi (20)^3} = 41.86 \text{ N/mm}^2$$

We know that maximum shear stress in the screw,

$$\tau_{max} = \frac{1}{2}\sqrt{(\sigma_c)^2 + 4\tau^2} = \frac{1}{2}\sqrt{(31.83)^2 + 4(41.86)^2}$$

$$= 44.8 \text{ N/mm}^2 = 44.8 \text{ MPa}$$ **Ans.**

3. *Number of threads of nut in engagement with screw*

Let n = Number of threads of nut in engagement with screw, and

t = Thickness of threads = p / 2 = 5 / 2 = 2.5 mm

We know that bearing pressure on the threads (p_b),

$$5.8 = \frac{W}{\pi d \times t \times n} = \frac{10 \times 10^3}{\pi \times 22.5 \times 2.5 \times n} = \frac{56.6}{n}$$

$\therefore$ $n = 56.6 / 5.8 = 9.76$ say 10 **Ans.**

$$P \cos \alpha = W \sin \alpha + \mu (P \sin \alpha + W \cos \alpha)$$
$$= W \sin \alpha + \mu P \sin \alpha + \mu W \cos \alpha$$

or $P \cos \alpha - \mu P \sin \alpha = W \sin \alpha + \mu W \cos \alpha$

or $P (\cos \alpha - \mu \sin \alpha) = W (\sin \alpha + \mu \cos \alpha)$

$$\therefore \quad P = W \times \frac{(\sin \alpha + \mu \cos \alpha)}{(\cos \alpha - \mu \sin \alpha)}$$

Substituting the value of $\mu = \tan \phi$ in the above equation, we get

or $$P = W \times \frac{\sin \alpha + \tan \phi \cos \alpha}{\cos \alpha - \tan \phi \sin \alpha}$$

Multiplying the numerator and denominator by $\cos \phi$, we have

$$P = W \times \frac{\sin \alpha \cos \phi + \sin \phi \cos \alpha}{\cos \alpha \cos \phi - \sin \alpha \sin \phi}$$
$$= W \times \frac{\sin (\alpha + \phi)}{\cos (\alpha + \phi)} = W \tan (\alpha + \phi)$$

$\therefore$ Torque required to overcome friction between the screw and nut,

$$T_1 = P \times \frac{d}{2} = W \tan (\alpha + \phi) \frac{d}{2}$$

Differential and Compound Screws

There are certain cases in which a very slow movement of the screw is required whereas in other cases, a very fast movement of the screw is needed. The slow movement of the screw may be obtained by using a small pitch of the threads, but it results in weak threads. The fast movement of the screw may be obtained by using multiple-start threads, but this method requires expensive machning and the loss of self-locking property. In order to overcome these difficulties, differential or compound screws, as discussed below, are used.

1. Differential screw. When a slow movement or fine adjustment is desired in precision

equipments, then a differential screw is used. It consists of two threads of the same hand (i.e. right handed or left handed) but of different pitches, wound on the same cylinder or different cylinders as shown in Fig. It may be noted that when the threads are wound on the same cylinder, then two nuts are employed as shown in Fig. (a) and when the threads are wound on different cylinders, then only one nut is employed as shown in Fig. (b).

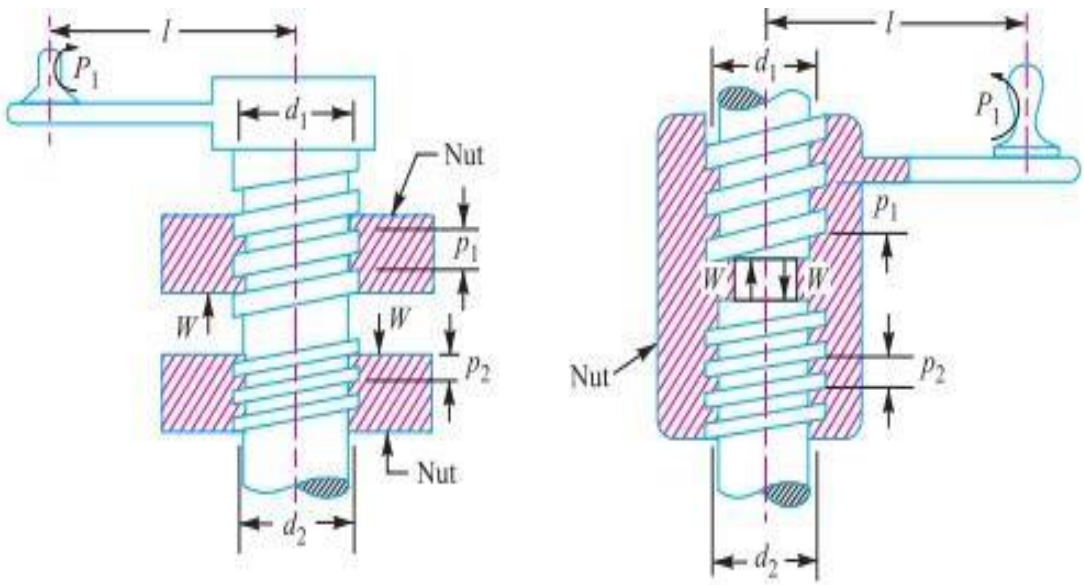

(a) Threads wound on the same cylinder. (b) Threads wound on the different cylinders.

p_1 = Pitch of the upper screw,

d_1 = Mean diameter of the upper screw,

α_1 = Helix angle of the upper screw, and

μ_1 = Coefficient of friction between the upper screw and the upper nut

= tan ϕ_1, where ϕ_1 is the friction angle.

p_2, d_2, α_2 and μ_2 = Corresponding values for the lower screw.

We know that torque required to overcome friction at the upper screw,

$$T_1 = W \tan(\alpha_1 + \phi_1)\frac{d_1}{2} = W\left[\frac{\tan\alpha_1 + \tan\phi_1}{1 - \tan\alpha_1 \tan\phi_1}\right]\frac{d_1}{2} \quad ...(i)$$

Similarly, torque required to overcome friction at the lower screw,

$$T_2 = W \tan(\alpha_2 + \phi_2)\frac{d_2}{2} = W\left[\frac{\tan\alpha_2 + \tan\phi_2}{1 - \tan\alpha_2 \tan\phi_2}\right]\frac{d_2}{2} \quad ...(ii)$$

∴ Total torque required to overcome friction at the thread surfaces,

$$T = P_1 \times l = T_1 - T_2$$

When there is no friction between the thread surfaces, then $\mu_1 = \tan\phi_1 = 0$ and $\mu_2 = \tan\phi_2 = 0$. Substituting these values in the above expressions, we have

$$\therefore \quad T_1' = W \tan\alpha_1 \times \frac{d_1}{2}$$

and

$$T_2' = W \tan\alpha_2 \times \frac{d_2}{2}$$

∴ Total torque required when there is no friction,

$$T_0 = T_1' - T_2'$$

$$= W \tan\alpha_1 \times \frac{d_1}{2} - W \tan\alpha_2 \times \frac{d_2}{2}$$

$$= W\left[\frac{p_1}{\pi d_1} \times \frac{d_1}{2} - \frac{p_2}{\pi d_2} \times \frac{d_2}{2}\right] = \frac{W}{2\pi}(p_1 - p_2)$$

$$\left[\because \tan\alpha_1 = \frac{p_1}{\pi d_1}; \text{ and } \tan\alpha_2 = \frac{p_2}{\pi d_2}\right]$$

We know that efficiency of the differential screw,

$$\eta = \frac{T_0}{T}$$

2. **Compound screw.** When a fast movement is desired, then a compound screw is employed. It consists of two threads of opposite hands (i.e. one right handed and the other left handed) wound on the same cylinder or different cylinders, as shown in Fig. (a) and (b) respectively. In this case, each revolution of the screw causes the nuts to move towards one another equal to the sum of the pitches of the threads. Usually the pitch of both the threads are made equal.

We know that torque required to overcome friction at the upper screw,

$$T_1 = W \tan(\alpha_1 + \phi_1)\frac{d_1}{2} = W\left[\frac{\tan\alpha_1 + \tan\phi_1}{1 - \tan\alpha_1 \tan\phi_1}\right]\frac{d_1}{2} \quad ...(i)$$

Similarly, torque required to overcome friction at the lower screw,

$$T_2 = W \tan(\alpha_2 + \phi_2)\frac{d_2}{2} = W\left[\frac{\tan\alpha_2 + \tan\phi_2}{1 - \tan\alpha_2 \tan\phi_2}\right]\frac{d_2}{2} \quad \text{...(ii)}$$

∴ Total torque required to overcome friction at the thread surfaces,

$$T = P_1 \times l = T_1 + T_2$$

When there is no friction between the thread surfaces, then $\mu_1 = \tan\phi_1 = 0$ and $\mu_2 = \tan\phi_2 = 0$. Substituting these values in the above expressions, we have

$$T_1' = W \tan\alpha_1 \times \frac{d_1}{2}$$

$$T_2' = W \tan\alpha_2 \times \frac{d_2}{2}$$

∴ Total torque required when there is no friction,

$$T_0 = T_1' + T_2'$$

$$= W \tan\alpha_1 \times \frac{d_2}{2} + W \tan\alpha_2 \times \frac{d_2}{2}$$

$$= W\left[\frac{p_1}{\pi d_1} \times \frac{d_1}{2} + \frac{p_2}{\pi d_2} \times \frac{d_2}{2}\right] = \frac{W}{2\pi}(p_1 + p_2)$$

We know that efficiency of the compound screw,

$$\eta = \frac{T_0}{T}$$

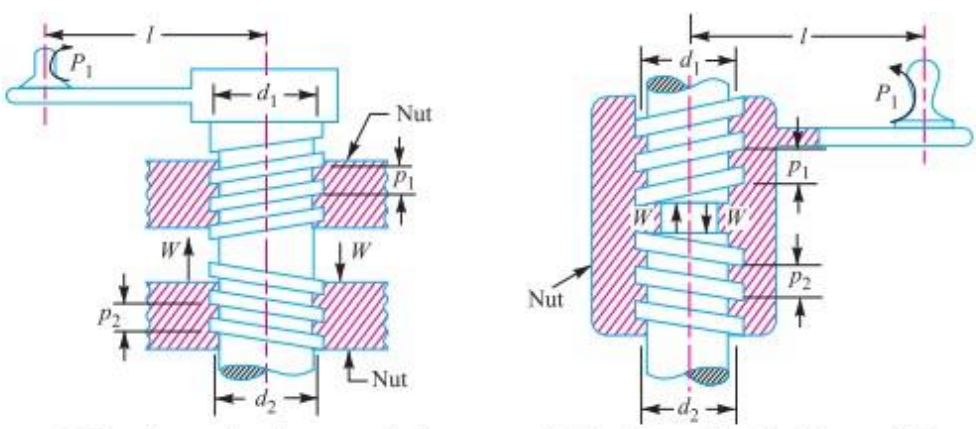

(a) Threads wound on the same cylinder. (b) Threads wound on the different cylinders.

4. A differential screw jack is to be made as shown in Fig. Neither screw rotates. The outside screw diameter is 50 mm. The screw threads are of square form single start and the coefficient of thread friction is 0.15.

Determine : 1. Efficiency of the screw jack; 2. Load

that can be lifted if the shear stress in the body of the screw is limited to 28 MPa.
Solution. Given : d_o = 50 mm ; μ = tan ϕ = 0.15 ;

p_1 = 16 mm ; p_2 = 12 mm ; τ_{max} = 28 MPa = 28 N/mm2

1. Efficiency of the screw jack

We know that the mean diameter of the upper screw,

$$d_1 = d_o - p_1/2 = 50 - 16/2 = 42 \text{ mm}$$

and mean diameter of the lower screw,

$$d_2 = d_o - p_2/2 = 50 - 12/2 = 44 \text{ mm}$$

$$\therefore \quad \tan\alpha_1 = \frac{p_1}{\pi d_1} = \frac{16}{\pi \times 42} = 0.1212$$

and

$$\tan\alpha_2 = \frac{p_2}{\pi d_2} = \frac{12}{\pi \times 44} = 0.0868$$

Let W = Load that can be lifted in N.

$$T_1 = W \tan(\alpha_1 + \phi)\frac{d_1}{2} = W\left[\frac{\tan\alpha_1 + \tan\phi}{1 - \tan\alpha_1 \tan\phi}\right]\frac{d_1}{2}$$

$$= W\left[\frac{0.1212 + 0.15}{1 - 0.1212 \times 0.15}\right]\frac{42}{2} = 5.8\,W \text{ N-mm}$$

Similarly, torque required to overcome friction at the lower screw,

$$T_2 = W \tan(\alpha_2 - \phi)\frac{d_2}{2} = W\left[\frac{\tan\alpha_2 - \tan\phi}{1 + \tan\alpha_2 \tan\phi}\right]\frac{d_2}{2}$$

$$= W\left[\frac{0.0868 - 0.15}{1 + 0.0868 \times 0.15}\right]\frac{44}{2} = -1.37\,W \text{ N-mm}$$

∴ Total torque required to overcome friction,

$$T = T_1 - T_2 = 5.8\,W - (-1.37\,W) = 7.17\,W \text{ N-mm}$$

We know that the torque required when there is no friction,

$$T_0 = \frac{W}{2\pi}(p_1 - p_2) = \frac{W}{2\pi}(16 - 12) = 0.636\,W \text{ N-mm}$$

∴ Efficiency of the screw jack,

$$\eta = \frac{T_0}{T} = \frac{0.636\,W}{7.17\,W} = 0.0887 \text{ or } 8.87\% \quad \textbf{Ans.}$$

2. Load that can be lifted

Since the upper screw is subjected to a larger torque, therefore the load to be lifted (W) will be calculated on the basis of larger torque (T1).

We know that core diameter of the upper screw,

$$d_{c1} = d_o - p_1 = 50 - 16 = 34 \text{ mm}$$

Since the screw is subjected to direct compressive stress due to load W and shear stress due to torque T_1, therefore

Direct compressive stress,

$$\sigma_c = \frac{W}{A_{c1}} = \frac{W}{\frac{\pi}{4}(d_{c1})^2} = \frac{W}{\frac{\pi}{4}(34)^2} = \frac{W}{908} \text{ N/mm}^2$$

and shear stress, $\tau = \frac{16\,T_1}{\pi\,(d_{c1})^3} = \frac{16 \times 5.8\,W}{\pi(34)^3} = \frac{W}{1331}$ N/mm^2

We know that maximum shear stress (τ_{max}),

$$28 = \frac{1}{2}\sqrt{(\sigma_c)^2 + 4\,\tau^2} = \frac{1}{2}\sqrt{\left(\frac{W}{908}\right)^2 + 4\left(\frac{W}{1331}\right)^2}$$

$$= \frac{1}{2}\sqrt{1.213 \times 10^{-6}\,W^2 + 2.258 \times 10^{-6}\,W^2} = \frac{1}{2}\,1.863 \times 10^{-3}\,W$$

$$\therefore \quad W = \frac{28 \times 2}{1.863 \times 10^{-3}} = 30\,060 \text{ N} = 30.06 \text{ kN} \quad \textbf{Ans.}$$

Industriual Applications:

1. Carpentary vices

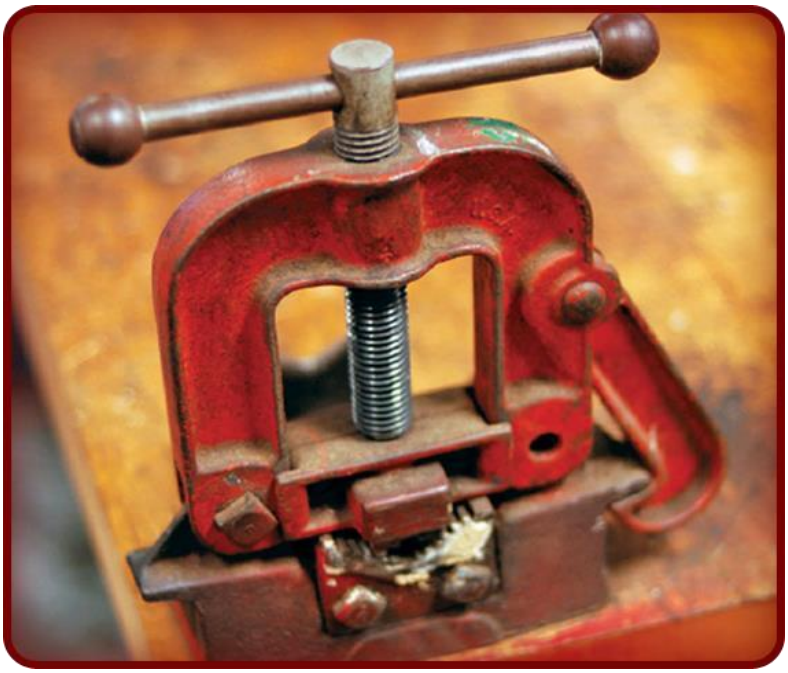

2. Lifting tool accessories

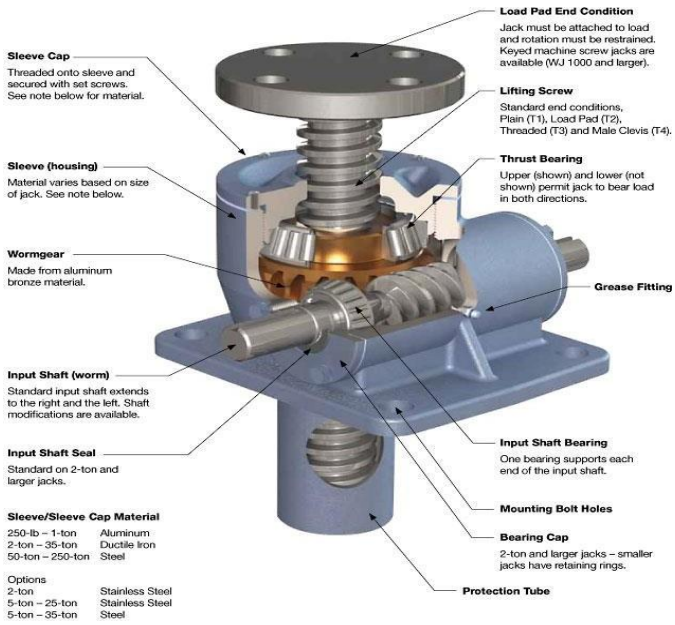

3. Lathe machines

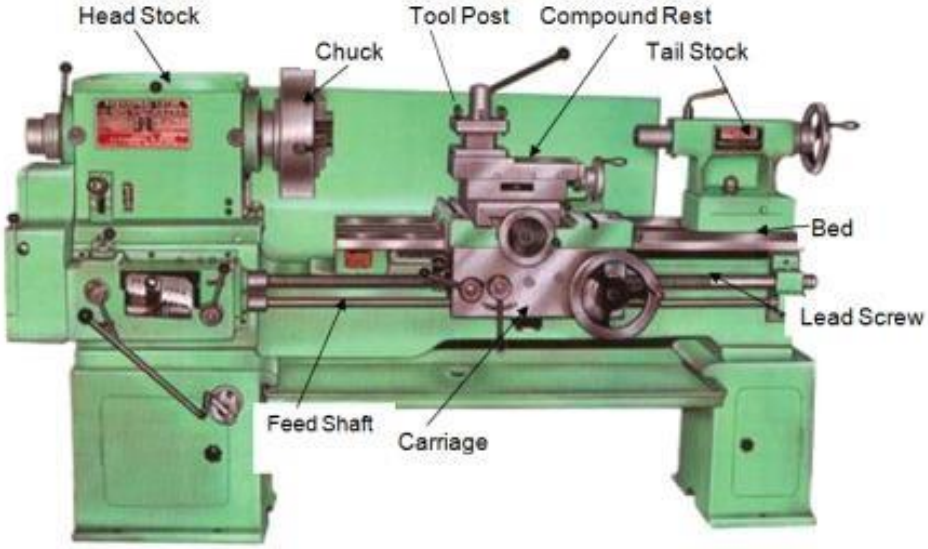

4. Differential screw in marine applications

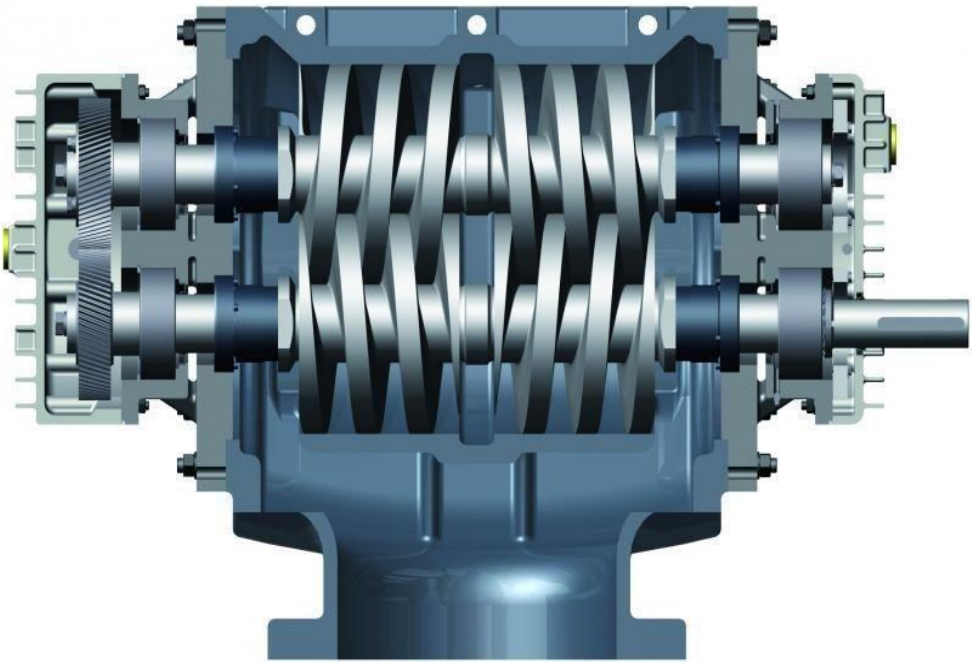

TUTORIAL QUESTIONS

1. Discuss the various types of power threads. Give atleast two practical applications for each type.Discuss their relative advantages and disadvantages.
2. Why are square threads preferable to V-threads for power transmission?
3. What is self locking property of threads and where it is necessary?
4. A power screw having double start square threads of 25 mm nominal diameter and 5 mm pitch is acted upon by an axial load of 10 kN. The outer and inner diameters of screw collar are 50 mm and 20 mm respectively. The coefficient of thread friction and collar friction maybe assumed as 0.2 and 0.15 respectively. The screw rotates at 12 r.p.m. Assuming uniform wear condition at the collar and allowable thread bearing pressure of 5.8 N/mm2, find: 1. the torque required to rotate the screw; 2. the stress in the screw; and 3. the number of threads of nut in engagement with screw. The screw of a shaft straightener exerts a load of 30 kN as shown in Fig. The screw is square threaded of outside diameter 75 mm and 6 mm
5. pitch. Determine:1. Force required at the rim of a 300 mm diameter hand wheel, assuming the coefficient of friction for the threads as 0.12;
3. Maximum compressive stress in the screw, bearing pressure on the threads and maximum shear stress in threads; and 3. Efficiency of the straightner

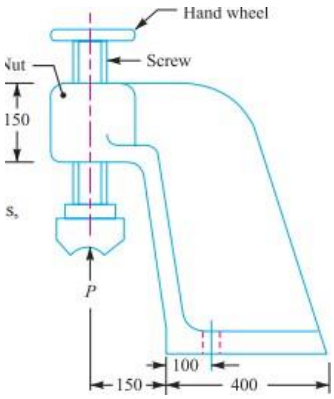

4. A screw jack is to lift a load of 80 kN through a height of 400 mm. The elastic strength of screw material in tension and compression is 200 MPa and in shear 120 MPa. The material for nut is phosphor-bronze for which the elastic limit may be taken as 100 MPa in tension, 90 MPa in compression and 80 MPa in shear. The bearing pressure between the nut and the screw is not to exceed 18 N/mm2. Design and draw the screw jack. The design should include the design of 1.screw, 2. nut, 3. handle and cup,and 4. body.

5. A differential screw jack is to be made as shown in Fig. Neither screw rotates. The outside screw diameter is 50 mm. The screw threads are of square form single start and the coefficient of thread friction is 0.15.Determine : 1. Efficiency of the screw jack; 2. Loadthat can be lifted if the shear stress in the body of the screw is limited to 28 MPa.

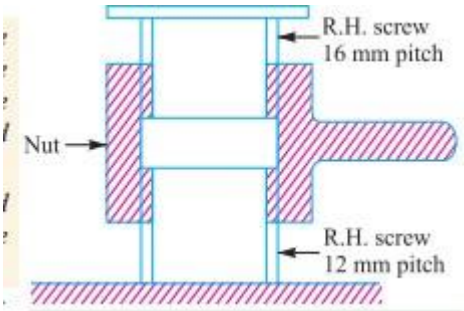

ASSIGNMENT QUESTIONS

1. A screw jack is to lift a load of 80 kN through aheight of 400 mm. The elastic strength of screw material in tension and compression is 200 MPa and in shear 120 MPa. The material for nut is phosphor-bronze for which the elastic limit may be taken as 100 MPa in tension, 90 MPa in compression and 80 MPa in shear. The bearing pressure between the nut and the screw is not to exceed 18 N/mm2. Design and draw the screw jack. The design should include the design of 1. screw, 2. nut, 3. handle and cup,and 4. body.

2. A power screw having double start square threads of 25 mm nominal diameter and 5 mm pitch is acted upon by an axial load of 10 kN. The outer and inner diameters of screw collar are 50 mm and 20 mm respectively. The coefficient of thread friction and collar friction may be assumed as 0.2 and 0.15 respectively. The screw rotates at 12 r.p.m. Assuming uniform wear condition at the collar and allowable thread bearing pressure of 5.8 N/mm2, find: 1. the torque required to rotate the screw; 2. the stress in the screw; and 3. the number of threads of nut in engagement with screw.

3. A power transmission screw of a screw press is required to transmit maximum load of 100 kN and rotates at 60 r.p.m. Trapezoidal threads are as under :

Nominal dia, mm	*40*	*50*	*60*	*70*
Core dia, mm	*32.5*	*41.5*	*50.5*	*59.5*
Mean dia, mm	*36.5*	*46*	*55.5*	*65*
Core area, mm^2	*830*	*1353*	*2003*	*2781*
Pitch, mm	*7*	*8*	*9*	*10*

The screw thread friction coefficient is 0.12. Torque required for collar friction and journal bearing is about 10% of the torque to drive the load considering screw friction. Determine screw dimensions and its efficiency. Also determine motor power required to drive the screw. Maximum permissible compressive stress in screw is 100 MPa.

4. A vertical two start square threaded screw of 100 mm mean diameter and 20 mm pitch supports a vertical load of 18 kN. The nut of the screw is fitted in the hub of a gear wheel having 80 teeth which meshes with a pinion of 20 teeth. The mechanical efficiency of the pinion and gear wheel drive is 90 percent. The axial thrust on the screw is taken by a collar bearing 250 mm outside diameter and 100 mm inside diameter. Assuming uniform pressure conditions, find, minimum diameter of pinion shaft and height of nut, when coefficient of friction for the vertical screw and nut is 0.15 and that for the collar bearing is 0.20. The permissible shear stress in the shaft material is 56 MPa and allowable bearing pressure is 1.4 N/mm^2

5. A square threaded bolt of mean diameter 24 mm and pitch 5 mm is tightened by screwing a nut whose mean diameter of bearing surface is 50 mm. If the coefficient of friction for the nut and bolt is 0.1 and for the nut and bearing surfaces 0.16, find the force required at the end of a spanner 0.5 m long when the load on the bolt is 10 kN.

UNIT-5

POWER SCREWS

MRCET CAMPUS

UGC Autonomous

DEPARTMENT OF MECHANICALENGINEERING

INTRODUCTION

- rotates and moves axially against the resisting force while the nut is stationary and in others the nut rotates while the screw The power screws (also known as ***translation screws***) are used to convert rotary motion into translator motion. For example, in the case of the lead screw of lathe, the rotary motion is available but the tool has to be advanced in the direction of the cut against the cutting resistance of the material. In case of screw jack, a small force applied in the horizontal plane is used to raise or lower a large load. Power screws are also used in vices, testing machines, presses, etc.

TYPES OF SCREW THREADS

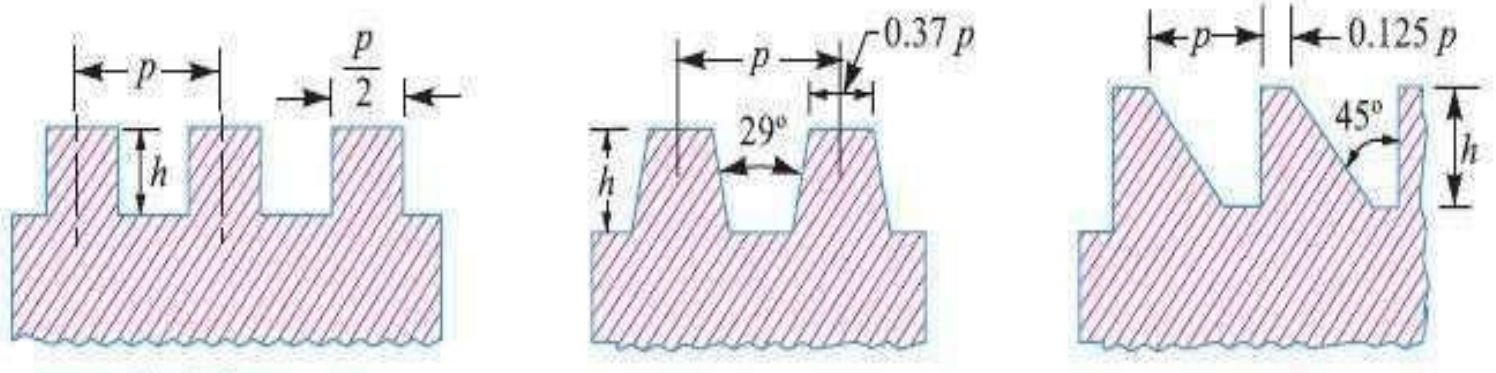

$h = 0.5\,p$
(*a*) Square thread.

$h = 0.5\,p + 0.25$ mm
(*b*) Acme thread.

$h = 0.75\,p$
(*c*) Buttress thread.

Torque Required to Raise Load by Square Threaded Screws

$$T_1 = P \times \frac{d}{2} = W \tan(\alpha + \phi)\frac{d}{2}$$

$$T_2 = \frac{2}{3} \times \mu_1 \times W \left[\frac{(R_1)^3 - (R_2)^3}{(R_1)^2 - (R_2)^2}\right]$$ ... (Assuming uniform pressure conditions)

$$= \mu_1 \times W \left(\frac{R_1 + R_2}{2}\right) = \mu_1 W R$$ ....(Assuming uniform wear conditions)

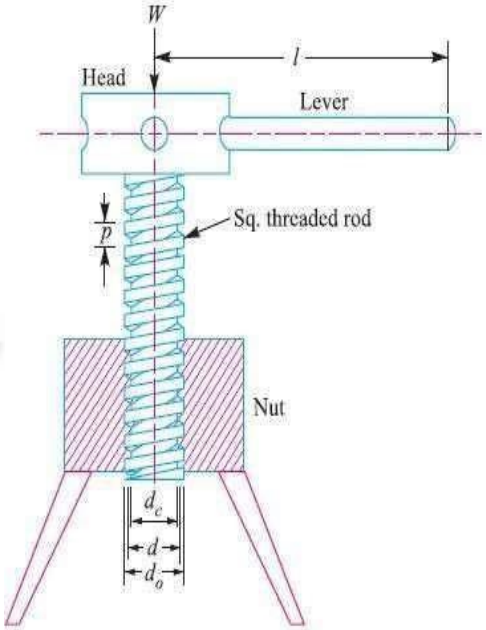

(a) Screw jack.

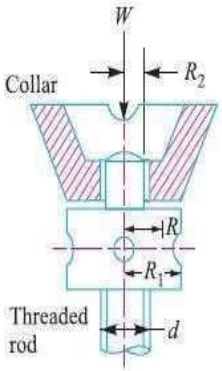

(b) Thrust collar.

Total torque required to overcome friction (*i.e.* to rotate the screw), $T = T_1 + T_2$

$$T = P \times \frac{d}{2} = P_1 \times l$$

DIFFERENTIAL SCREWS

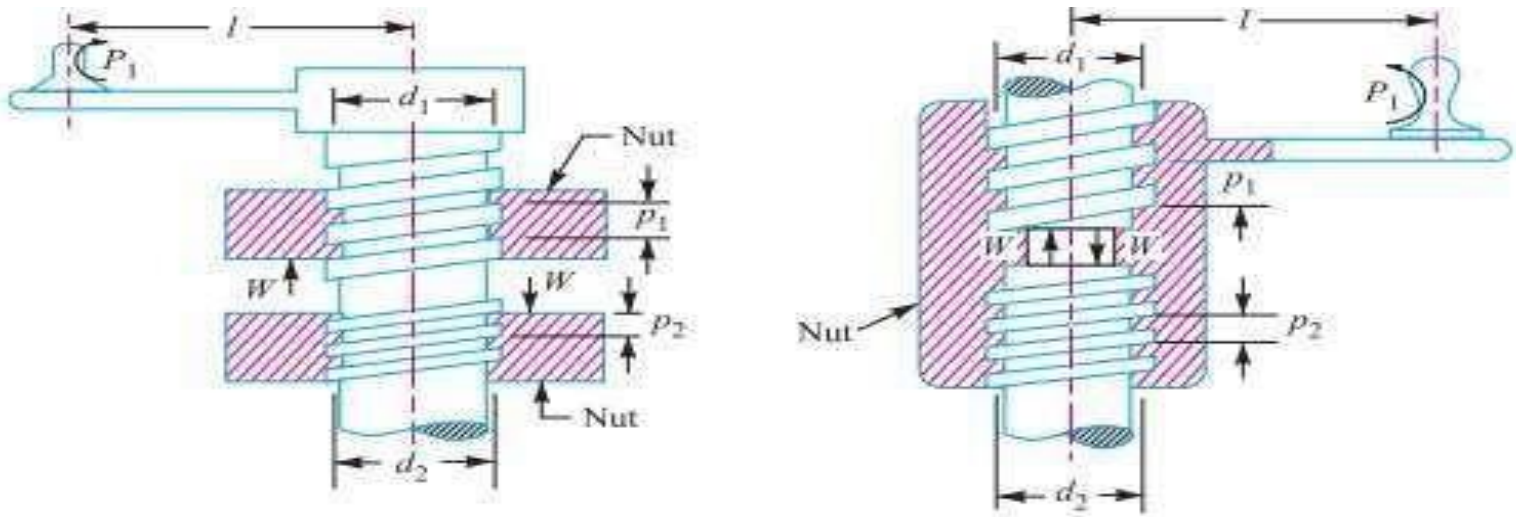

inders.

$$= W\left[\frac{p_1}{\pi d_1}\times\frac{d_1}{2}-\frac{p_2}{\pi d_2}\times\frac{d_2}{2}\right]=\frac{W}{2\pi}(p_1-p_2)$$

$$\left[\because \tan\alpha_1=\frac{p_1}{\pi d_1};\ \text{and}\ \tan\alpha_2=\frac{p_2}{\pi d_2}\right]$$

We know that efficiency of the differential screw,

$$\eta=\frac{T_0}{T}$$

COMPOUND SCREWS

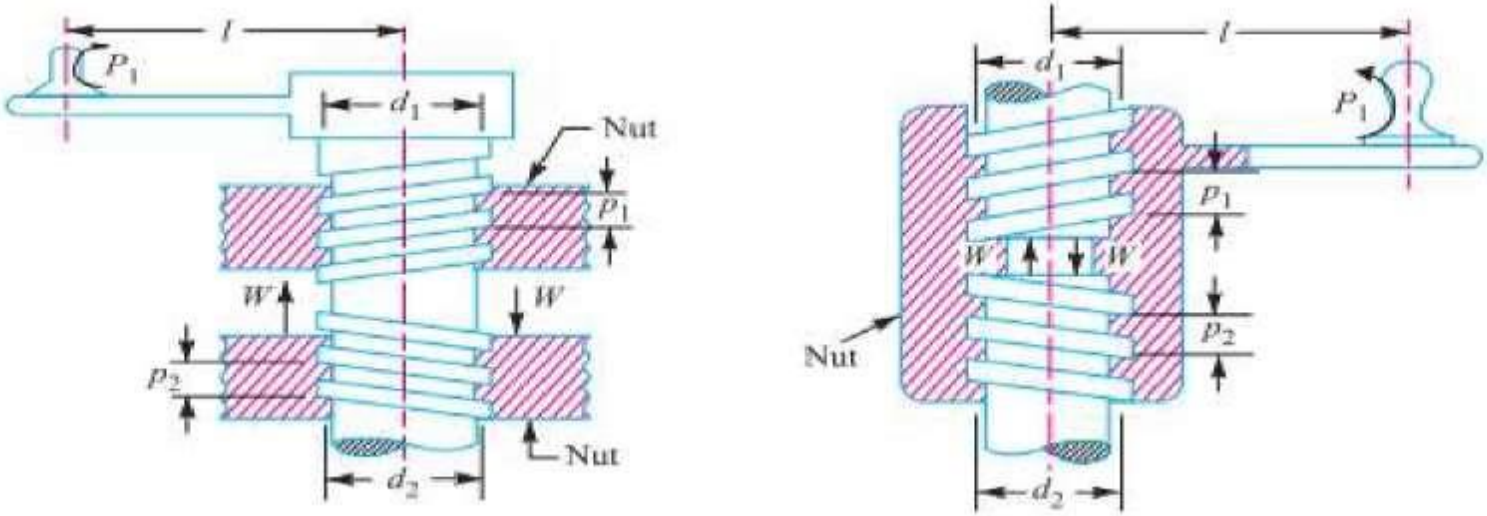

(a) Threads wound on the same cylinder. (b) Threads wound on the different cylinders.

$$= W\left[\frac{p_1}{\pi d_1} \times \frac{d_1}{2} + \frac{p_2}{\pi d_2} \times \frac{d_2}{2}\right] = \frac{W}{2\pi}(p_1 + p_2)$$

We know that efficiency of the compound screw,

$$\eta = \frac{T_0}{T}$$

PREVIOUS YEAR QUESTION PAPERS

Code No: R15A0321

R15

MALLA REDDY COLLEGE OF ENGINEERING & TECHNOLOGY

(Autonomous Institution – UGC, Govt. of India)

III B.Tech II Semester Regular Examinations, April/May 2018

Machine Design-II

(ME)

Roll No										

Time: 3 hours **Max. Marks: 75**

Note: This question paper contains two parts A and B

Part A is compulsory which carriers 25 marks and Answer all questions.

Part B Consists of 5 SECTIONS (One SECTION for each UNIT). Answer FIVE Questions, Choosing ONE Question from each SECTION and each Question carries 10 marks.

******

PART – A (25 Marks)

Q. No. 1.

(a) What is meant by Basic Dynamic Load Rating of Rolling Contact Bearings? 2 Marks

(b) Define Reliability of a Bearing. 3 Marks

(c) Under what force, the big end bolts and caps of connecting rod are designed? 2 Marks

(d) Write about Dry and Wet liners. 3 Marks

(e) Explain slip of the belt (at both driver and driven pulleys), in belt drive. 2 Marks

(f) Derive the condition for maximum power transmission in belt drive. 3 Marks

(g) What are the materials used for spur gear and helical gear . 2 Marks

(h) Define Equivalent Number of Teeth for Helical Gears? 3 Marks

(i) Differentiate between differential screw and compound screw. 2 Marks

(j) Prove that the efficiency of self locking screw is less than 50%. 3Marks

PART – B (50 Marks)

SECTION – I

Q. No. 2

A ball bearing operates on the following work cycle:

Element No.	Radial load(N)	Speed (RPM)	Element time (%)
1	3000	720	30
2	7000	1440	40
3	5000	900	30

The dynamic load capacity of the bearing is 16600 N. Calculate

(a) The average speed of rotation;

(b) The equivalent radial load and

(c) The bearing life. **10 Marks**

OR

Q. No. 3

a) The load on the journal bearing is 150 kN due to turbine shaft of 300 mm diameter running at 1800 r.p.m. Determine the following :

1. Length of the bearing if the allowable bearing pressure is 1.6 N/mm^2, and

2. Amount of heat to be removed by the lubricant per minute if the bearing temperature is 60°C and viscosity of the oil at 60°C is 0.02 kg/m-s and the bearing clearance is 0.25 mm.

b) A ball bearing subjected to a radial load of 5 kN is expected to have a life of 8000 hours at 1450 r.p.m. with a reliability of 99%. Calculate the dynamic load capacity of the bearing so that it can be selected from the manufacturer's catalogue based on a reliability of 90%.

10 Marks

SECTION – II

Q. No. 4

Design a cast iron trunk type piston for a single acting four stroke engine developing 75 kW per cylinder when running at 600 r.p.m. The other available data is as follows: Maximum gas pressure = 4.8 N/mm^2; Indicated mean effective pressure = 0.65 N/mm^2; Mechanical efficiency = 95%; Radius of crank = 110 mm; Fuel consumption = 0.3 kg/BP/hr; Calorific value of fuel (higher) = 44 x 103 kJ/kg; Difference of temperatures at the centre and edges of the piston head = 200°C; Allowable stress for the material of the piston = 33.5 MPa; Allowable stress for the material of the piston rings and gudgeon pin = 80 MPa; Allowable bearing pressure on the piston barrel = 0.4 N/mm^2 and allowable bearing pressure on the gudgeon pin = 17 N/mm^2. **10 Marks**

OR

Q. No. 5

Design a plain carbon steel centre crankshaft for a single acting four stroke single cylinder engine for the following data:

Bore = 400 mm ; Stroke = 600 mm ; Engine speed = 200 r.p.m. ; Mean effective pressure = 0.5 N/mm^2; Maximum combustion pressure = 2.5 N/mm^2; Weight of flywheel used as a pulley = 50 kN; Total belt pull = 6.5 kN.

When the crank has turned through 35° from the top dead centre, the pressure on the piston is 1N/mm^2 and the torque on the crank is maximum. The ratio of the connecting rod length to the crank radius is 5. Assume any other data required for the design. **10 Marks**

SECTION – III

Q. No. 6

An open belt 100 mm wide connects two pulleys mounted on parallel shafts with their centres 2.4 m apart. The diameter of the larger pulley is 450 mm and that of the smaller pulley 300 mm. The coefficient of friction between the belt and the pulley is 0.3 and the maximum stress in the belt is limited to 14 N/mm width. If the larger pulley rotates at 120 r.p.m, find the maximum power that can be transmitted. **10 Marks**

OR

Q. No. 7

A V- belt drive is used to connect two shafts 1 m apart for transmitting 90 KW at 1200 rpm of a driver pulley. Take effective diameter of driver pulley = 250 mm, effective diameter of drive pulley = 900 mm, coefficient of friction = 0.25, density of the belt material = 1100 kg/m^3, the angle of groove = 40^0, area of the belt section is 400 mm^2 and permissible stress is 2.46 MPa. Calculate the number of belts required and the length of belt. **10 Marks**

SECTION – IV

Q. No. 8

A pair of 5 mm module, 20^0 involute full depth spur gears, with a face width of 40 mm are made of steel having 350 BHN. The pinion has 28 teeth and runs at 1200 rpm. The gear ratio is 4. What power can be transmitted as per Lewis strength design? Assuming that this much power is being transmitted, check the design for dynamic and wear loads. The static strength of the material of the gears is 210 MPa, and surface endurance limit is nearly 900 MPa.

10 marks

OR

Q. No. 9

A pair of helical gears are to transmit 15kw. The teeth are 20°stud in diametral plane and have a helix angle of 45°. The pinion runs at 10000 rpm and has 80mm pitch diameter. The gear has 320mm pitch diameter. If the gears are made of cast steel having allowable static strength of 100 mpa . Determine a suitable module and face width from static strength considerations and check the gears for wear, given allowabl stress618mpa **10 Marks**

SECTION – V

Q. No. 10

A vertical two start square threaded screw of a 100 mm mean diameter and 20 mm pitch supports a vertical load of 18 kN. The axial thrust on the screw is taken by a collar bearing of 250 mm outside diameter and 100 mm inside diameter. Find the force required at the end of a lever which is 400 mm long in order to lift and lower the load. The coefficient of friction for the vertical screw and nut is 0.15 and that for collar bearing is 0.20. **10 marks**

OR

Q. No. 11

The lead screw of a lathe has Acme threads of 60 mm outside diameter and 8 mm pitch. It supplies drive to a tool carriage which needs an axial force of 2000 N. A collar bearing with inner and outer radius as 30 mm and 60 mm respectively is provided. The coefficient of friction for the screw threads is 0.12 and for the collar it is 0.10. Find the torque required to drive the screw and the efficiency of the screw. **10 Marks**

****

R15

Code No: R15A0321

MALLA REDDY COLLEGE OF ENGINEERING & TECHNOLOGY

(Autonomous Institution – UGC, Govt. of India)

III B.Tech II Semester Regular/supplementary Examinations, April/May 2019

Machine Design-II

(ME)

Roll No										

Time: 3 hours **Max. Marks: 75**

Note: This question paper contains two parts A and B

Part A is compulsory which carriers 25 marks and Answer all questions.

Part B Consists of 5 SECTIONS (One SECTION for each UNIT). Answer FIVE Questions, Choosing ONE Question from each SECTION and each Question carries 10 marks.

****

PART-A (25 Marks)

1).	a	Differentiate full and partial journal bearings?	**[2M]**
	b	If life of the bearing is $50X10^6$ revolutions and operating speed is 1000rpm, what is the life of the bearing in hours.	**[3M]**
	c	Differentiate the full floating and semi floating type of connection between piston pin and small end of connecting rod.	**[2M]**
	d	State the function of the following i) compression rings ii) oil rings.	**[3M]**
	e	What is centrifugal tension and state whether centrifugal tension affects the amount of transmitted power?	**[2M]**
	f	When power is transmitting between pulleys of same diameter but different coefficient of friction, then on which pulley basis the design should be carried.	**[3M]**
	g	What is the advantage of using helical gear over spur gear?	**[2M]**
	h	Explain the Law of gearing?	**[3M]**
	i	What is the virtual coefficient of friction that makes the acme threaded screws equivalent to square threads.	**[2M]**
	j	What is distance raised/lowered for one complete revolution for compound screws made of two screws with same pitch (10mm).	**[3M]**

PART-B (50 MARKS)

SECTION-I

2	A 100 mm long and 60 mm diameter journal bearing supports a load of 2500 N at 600 r.p.m. If the room temperature is 20°C, what should be the viscosity of oil to limit the bearing surface temperature to 60°C? The diametral clearance is 0.06 mm and the energy dissipation coefficient based on projected area of bearing is 210 $W/m^2/°C$.	**[10M]**

OR

3	Select single row deep groove ball bearing for an application in which the radial load is 2000 N and axial is 1000N during 90 per cent of the time and radial of 8000 N with axial load of 5000N during the remaining 10 per cent. The shaft is to rotate at 150 r.p.m. Life of the bearing is 5000 hours. Also find the life of the selected bearing with 95% reliability.	**[10M]**

SECTION-II

4 A connecting rod is required to be designed for a high speed, four stroke I.C. engine. The following data are available. **[10M]**

Diameter of piston = 88 mm; Mass of reciprocating parts = 1.6 kg; Length of connecting rod (centre to centre) = 300 mm; Stroke = 125 mm; R.P.M. = 2200 (when developing 50 kW); Possible over speed = 3000 r.p.m.; Compression ratio = 6.8 : 1 (approximately); Probable maximum explosion pressure (assumed shortly after dead centre, say at about 3°) = 3.5 N/mm^2.

OR

5 Design a CI piston for a single acting four stroke petrol engine of the following specifications : **[10M]**

Cylinder bore = 100mm
Stroke Length =120mm
Maximum gas pressure = 5MPa
Break mean effective Pressure =0.65MPa
Fuel Consumption = 0.17kg/bhp/min
Speed =220rpm

SECTION-III

6 An open belt 100 mm wide connects two pulleys mounted on parallel shafts with their centres 2.4 m apart. The diameter of the larger pulley is 450 mm and that of the smaller pulley 300 mm. The coefficient of friction between the belt and the pulley is 0.3 and the maximum stress in the belt is limited to 14 N/mm width. If the larger pulley rotates at 120 r.p.m., find the maximum power that can be transmitted.. **[10M]**

OR

7 Select a suitable wire rope for a vertical mine hoist to lift a load of 10 kN from 60 m deep. The rope should have a factor of safety equal to 6. The weight of the bucket is 5 kN. The load is lifted up with a maximum speed of 150 metres/min which is attained in 1 second. **[10M]**

SECTION-IV

8 A pair of 20° full-depth involute tooth spur gears is to transmit 30 kW at a speed of 250 r.p.m. of the pinion. The velocity ratio is 1 : 4. The pinion is made of cast steel having an allowable static stress, σo = 100 MPa, while the gear is made of cast iron having allowable static stress, σo = 55 MPa. The pinion has 20 teeth and its face width is 12.5 times the module. Determine the module, face width and pitch diameters of both the pinion and gear from the standpoint of strength only taking velocity factor into consideration. **[10M]**

OR

9 A pair of helical gears with 30° helix angle is used to transmit 15 kW at 10 000 r.p.m. of the pinion. The velocity ratio is 4 : 1. Both the gears are to be made of hardened steel of static strength 100 N/mm^2. The gears are 20° stub and the pinion is to have 24 teeth. The face width may be taken as 14 times the module. Find the module and face width from the standpoint of strength and check the gears for wear. **[10M]**

SECTION-V

10 A power screw having double start square threads of 25 mm nominal diameter and 5 mm pitch is acted upon by an axial load of 10 kN. The outer and inner diameters **[10M]**

of screw collar are 50 mm and 20 mm respectively. The coefficient of thread friction and collar friction may be assumed as 0.2 and 0.15 respectively. The screw rotates at 12 r.p.m. Assuming uniform wear condition at the collar and allowable thread bearing pressure of 5.8 N/mm ^{2}, find: 1. the torque required to rotate the screw; 2. the stress in the screw; and 3. the number of threads of nut in engagement with screw.

OR

11 A nut and screw combination having double start square threads nominal diameter 25 mm and pitch 5 mm subjected to axial load of 1000 N. The outer and inner diameter of the screw coller is 50 and 20 mm respectively. The coefficient of friction for collar thread and screw thread are 0.15 & 0.2 respectively. The screw rotates at 12 rpm. Assume uniform wear condition, and allowable bearing pressure is 5.77 N/mm^2. Determine, **[10M]**

i) Power required to rotate the screw

ii)Stresses in screw Body & threads

iii)No. of threads of nut in engage with screw.

******

R15

Code No: R15A0321

MALLA REDDY COLLEGE OF ENGINEERING & TECHNOLOGY

(Autonomous Institution – UGC, Govt. of India)

III B.Tech II Semester supplementary Examinations, Nov/Dec 2018

Machine Design-II

(ME)

Roll No										

Time: 3 hours **Max. Marks: 75**

Note: This question paper contains two parts A and B

Part A is compulsory which carriers 25 marks and Answer all questions.

Part B Consists of 5 SECTIONS (One SECTION for each UNIT). Answer FIVE Questions, Choosing ONE Question from each SECTION and each Question carries 10 marks.

*****

PART – A (25 Marks)

Q. No. 1.

(a) What is the difference between full journal and partial journal bearing? 2 M

(b) What is Bearing Characteristic Number and Bearing Modulus? 3 M

(c) State the function of Piston Rings and Piston Skirt for an IC engine piston. 2 M

(d) Explain Full-Floating and Semi-Floating type of connection between piston pin and small end of connecting with neat sketches. 3 M

(e) What are the factors affects the amount of power transmission in belt drive? 2 M

(f) Under what circumstances a fibre rope and a wire rope is used? What are the advantages of a wire rope over fibre rope? 3 M

(g) What is the advantage of herringbone gear over single helical gear? 2 M

(h) What condition must be satisfied in order that a pair of spur gears may have a constant velocity ratio? 3 M

(i) How does the helix angle influence on the efficiency of square threaded screw? 2 M

(j) What is self locking property of threads and where it is necessary? 3 M

PART – B (50 Marks)

SECTION – I

Q. No. 2

a) Select a ball bearing to carry satisfactorily a 65 kN radial load together with 10 kN of thrust load. The journal supported by the bearing rotates at 1400 rpm for an estimated 0.1 million hours of life. The journal diameter is 100 mm. **5 M**

b) A 80 mm long journal bearing supports a load of 2800 N on a 50 mm diameter shaft. The bearing has a radial clearance of 0.05 mm and the viscosity of the oil is 0.021 kg / m-s at the operating temperature. If the bearing is capable of dissipating 80 J/s, determine the maximum safe speed. **5 M**

OR

Q. No. 3

A 100 mm long and 60 mm diameter journal bearing supports a load of 2500 N at 600 r.p.m. If the room temperature is 20°C, what should be the viscosity of oil to limit the bearing surface temperature to 60°C? The diametral clearance is 0.06 mm and the energy dissipation coefficient based on projected area of bearing is 210 $W/m^2/°C$. **10M**

SECTION – II

Q. No. 4

Design a connecting rod of I cross section for an automobile diesel engine of the following specifications.
Diameter of cylinder=100mm
Stroke length =125mm
Maximum combustion pressure =2.8MPa
Maximum engine speed=2000rpm
Weight of the reciprocating parts =1.1kg
Length of connecting rod between centers=31.5cm
Assume an allowable crushing stress =3000kg/cm^2. **10 M**

OR

Q. No. 5

Design a plain carbon steel centre crankshaft for a single acting four stroke single cylinder engine for the following data:
Bore = 400 mm ; Stroke = 600 mm ; Engine speed = 200 r.p.m. ; Mean effective pressure = 0.5 N/mm^2; Maximum combustion pressure = 2.5 N/mm^2; Weight of flywheel used as a pulley = 50 kN; Total belt pull = 6.5 kN.
When the crank has turned through 35° from the top dead centre, the pressure on the piston is 1N/mm^2 and the torque on the crank is maximum. The ratio of the connecting rod length to the crank radius is 5. Assume any other data required for the design. **10M**

SECTION – III

Q. No. 6

A V-belt drive system transmits 100 kW at 475 r.p.m. The belt has a mass of 0.6 kg/m. The maximum permissible tension in the belt is 900 N. The groove angle is 38° and the angle of contact is 160°. Find minimum number of belts and pulley diameter. The coefficient of friction between belt and pulley is 0.2. **10 M**

OR

Q. No. 7

An extra flexible 8 × 19 plough steel wire rope of 38 mm diameter is used with a 2m diameter hoist drum to lift 50 kN of load. Find the factor of safety (ratio of the breaking load to the maximum working load) under the following conditions of operation :
The wire rope is required to lift from a depth of 900 metres. The maximum speed is 3 m / s and the acceleration is 1.5 m / s^2, when starting under no slack condition. The diameter of the wire may be taken as 0.05 d, where d is the diameter of wire rope. The breaking strength of plough steel is 1880 N/mm^2 and modulus of elasticity of the entire rope is 84 × 103 N/mm^2. The weight of the rope is 53 N/m length. **10 M**

SECTION – IV

Q. No. 8

What should be the module, face width and number of teeth on each gear of a pair of spur gears, a C45 steel pinion driving a cast iron gear, if they are to transmit 18.75 kW at 700 rev/min of the 0.18m pinion in continuous service? The velocity ratio is 3, the teeth are 200 full depth and the load is smooth. Determine the outside and root diameters. **10 M**

OR

Q. No. 9

Two parallel shafts are connected by a pair of steel helical gears. The power transmitted is 15kW at 4000rpm of the pinion. The safe static strength for the material is 100MPa. Gear ratio is 4:1 Stub teeth with 20^0 pressure angle in diameter plane have helix angle of 45^0. Also calculate the necessary BHN with the standard point of wear. Check the design for dynamic load and suggest modification if necessary. Use 30 teeth on the pinion. **10 M**

SECTION – V

Q. No. 10

The screw of a press has square threads and is 60 mm nominal diameter. The maximum unsupported length is 40 mm. The screw is made of 25C4 steel and the nut is of phosphor bronze. Determine the capacity of the press and length of the nut. If the coefficient of friction for the threads is 0.15 and 0.14 for the thrust collar, determine the necessary torque, taking outside and inside diameter of thrust collar to be 100 mm and 30 mm respectively. **10 M**

OR

Q. No. 11

A machine slide weighing 3000 N is elevated by a double start acme threaded screw at the rate of 840 mm/min. If the coefficient of friction be 0.12, calculate the power to drive the slide. The end of the screw is carried on a thrust collar of 32 mm inside diameter and 58 mm outside diameter. The pitch of the screw thread is 6 mm and outside diameter of the screw is 40 mm. If the screw is of steel, is it strong enough to sustain the load? **10 M**

****